Ref. Ares(2022)4166308 - 04/06/2022

CONSTRUCTION OF

ÇERKEZKÖY INTERMODAL TERMINAL (IMT)

SECTION III – EMPLOYER'S REQUIREMENTS

CONSTRUCTION

TABLE OF CONTENTS

1. GENERAL TECHNICAL REQUIREMENTS 11
1.1. SPECIFICATIONS AND STANDARDS 11
1.1.1. Specifications 11
1.1.2. Standards 11
2. APPLICATION WORKS, MEASURMENTS AND INSTRUMENTATION 12
3. MAPPING WORKS 14
3.1. Mapping 14
3.2. Application drawings 14
4. CONSTRUCTION WORKS 15
4.1. Introduction 15
4.2. Soil works 15
4.2.1. Excavation 15
4.2.2. Filling 17
4.2.3. Approach filling of engineering structures 21
4.2.4. Selected material (Sub-base) 26
4.2.5. Borrow areas 28
4.2.6. Soil improvement 28
4.3. Concrete works 39
4.3.1. Concrete materials 39
4.3.2. Concrete mixtures 40
4.3.3. Transport and storage of materials 43
4.3.4. Mixing the concrete 44
4.3.5. Transfer and pouring of concrete 45
4.3.6. Transport of concrete 45
4.3.7. Pumped concrete 46
4.3.8. Compaction of concrete 46
4.3.9. Cure of concrete 46
4.3.10. Early loading 47
4.3.11. Transport, placement and storage of ready reinforced elements 47
4.3.12. Production of ready mixed concrete elements outside the site 47
4.3.13. Concrete control tests 47
4.3.14. Potential cement aggregate reaction 48
4.3.15. Protection of concrete surfaces 48
4.4. Formworks 49
4.4.1. Materials 49
4.4.2. Construction requirements 49
4.5. Reinforcement steel works 51
4.5.1. Scope 51
4.5.2. Material 51
4.5.3. Bar reinforcements 51

4.5.4. Ready-made reinforcements 52
4.5.5. Tests and test certificate of the manufacturer 52
4.5.6. Bar ranges 52
4.5.7. Distances from the concrete surface 52
4.5.8. Storage 52
4.5.9. Surface conditions and additional measurements 53
4.5.10. Preparation and placement of the reinforcement 53
4.5.11. Cutting and bending 53
4.5.12. Placement 54
4.5.13. Pillars 55
4.5.14. Overlapping length of the bars and steel mesh 55
4.5.15. Welding 55
4.5.16. Mesh reinforcement or tensioned metal reinforcement 55
4.5.17. Approvement before concreting 55
4.6. Concrete structure 55
4.6.1. Joints and joint fillers 56
4.6.2. Water traps 58
4.6.3. Components embedded to the concrete 58
4.6.4. Preparation of the surfaces following the molding 59
4.6.5. Preparation of the shapeless surfaces 59
4.6.6. Repairing the surface discontinuities 59
4.7. Piling 59
4.7.1. Cast in site pile fabricating 60
4.7.2. Pile loading tests 60
4.8. Ground anchors 61
4.8.1. General 61
4.8.2. Anchor type and technical features 61
4.8.3. Land registrations 62
4.9. Steel construction 63
4.9.1. Manufacturing 63
4.9.2. Joints 64
4.9.3. Protection against corrosion 66
4.10. Pipes 69
4.10.1. General 69
4.10.2. Method notification regarding pipe laying 69
4.10.3. Pipe materials 70
4.10.4. Tests of materials 72
4.10.5. Transport and storage of pipes 73
4.10.6. Pipe laying 74
4.10.7. Cutting pipes 77
4.10.8. Testing and sterilization of pipelines 77
4.10.9. Storm drains, source facility, siphons, drainage ditches and manholes 78
4.11. Reinforced earth walls 80
4.11.1. Components of reinforced earth 80
4.11.2. Prefabricated concrete components 80
4.11.3. Steel stripes 81

4.11.4. Selected back filling 81
4.11.5. Reinforced soil construction 82
4.12. Expansion joint assembly 82
4.12.1. Definition 82
4.12.2. Anchored expansion joints 82
4.13. Road railings 85
4.13.1. Definition 85
4.13.2. Material 86
4.14. Guardrails 87
4.14.1. Definition 87
4.14.2. Types of guardrails 87
4.14.3. Guardrail elements 87
4.14.4. Material to be used 87
4.14.5. Manufacture of materials 88
4.14.6. Installation of guardrail 89
5. RAILWAY INFRASTRUCTURE WORKS 91
5.1. General 91
5.1.1. Scope of works 91
5.1.2. Line materials and equipment 91
5.1.3. General terms related to line materials and equipment 96
5.1.4. Infrastructure construction works 96
5.1.5. Rail welding works 96
5.2. Infrastructure construction 96
5.2.1. Scope of works 96
5.2.2. General 96
5.2.3. Establishing and removal of the construction site 97
5.2.4. Material supply 97
5.2.5. Construction machinery parking track 97
5.2.6. Removal of the existing track 98
5.2.7. Ballast laying 98
5.2.8. Long welded rail 99
5.2.9. Installation of guard rail 100
5.2.10. Installation of buffer stoppers 101
5.2.11. Stabilization of the line 102
5.2.12. Welding rails 102
5.2.13. Setting out and marking the line 102
5.2.14. Scope of works 103
5.2.15. Infrastructure works 103
5.2.16. Innspection procedure 103
5.2.17. Line geometry measurement parameters 107
5.2.18. Line geometry acceptance tolerances 109
5.3. Concrete sleepers 109
5.3.1. Scope of works 109
5.3.2. Line characteristics 109
5.3.3. Manufacturing processes and technical specifications 110

5.3.4. Acceptance conditions 110
5.3.5. Fatigue test 112
5.3.6. Static test 112
5.3.7. Static test in rail settling site 112
5.3.8. Static test at sleeper center 113
5.3.9. Dynamic test 113
5.3.10. Vertical load test 113
5.3.11. Longitudinal resistance test 113
5.3.12. Electrical resistance test 113
5.3.13. Dimension and workmanship inspection 113
5.3.14. Results to be obtained from tests 114
5.3.15. General terms 114
5.4. Ballasts 120
5.4.1. Introduction 120
5.4.2. Geological specifications 120
5.4.3. Geotechnical specifications 120
5.4.4. General provisions 122
5.5. Switches 122
5.5.1. Technical requirements 122
5.5.2. Lock mechanism 124
5.5.3. Switch concrete sleepers 125
5.5.4. Marking 127
5.5.5. Forged products 127
5.5.6. Technical delivery requirements 127
5.5.7. Acceptance conditions 129
5.5.8. Controls at the beginning and during manufacturing 130
5.5.9. Final control 130
5.5.10. Loading and shipment 130
5.5.11. Guarantees 130
5.6. Elastic connection system elements (HM – W14) 130
5.6.1. Scope of works 130
5.6.2. Type and quantity 131
5.6.3. General characteristics of the connection system 131
5.6.4. Characteristics of the elements composing hm connection system 132
5.6.5. Acceptance conditions 134
5.6.6. Gauges 138
5.6.7. Marking 138
5.6.8. General conditions 139
5.7. Machineries to be used for track construction 139
5.7.1. Common specifications for the railway equipment 139
5.7.2. General mechanical specifications 139
5.7.3. Tamping machine (M1) 140
5.7.4. Switch tamping machine (M2) 141
5.7.5. Ballast regulator (M3) 142
5.7.6. Dynamic line stabilizer (M4) 143
5.7.7. Track inspection equipment (M5) 143

5.7.8. Track & catenaries inspection machine (M6) 145
5.7.9. Non-destructive inspection equipment (M7) 148
5.7.10. Rail welding machine (M8) 150
5.7.11. Rail grinding machine (M9) 151
5.7.12. Special conditions 154
5.7.13. Staff 154
5.7.14. Parking and transport operations for the machines 154
5.8. Insulated joints 155
5.8.1. Scope of works 155
5.8.2. Production conditions 155
5.8.3. Acceptance conditions 156
5.8.4. Physical examination 157
5.8.5. Laboratory examination 157
5.8.6. Evaluation of test results 159
5.8.7. Preservation, packaging, marking 159
5.8.8. Guarantee 159
5.9. Fishplates 160
5.9.1. Production requirements 160
5.9.2. Technical specifications 161
5.9.3. Acceptance conditions 162
5.9.4. Inspections and tests basic to acceptance 163
5.9.5. Physical examination 163
5.9.6. Evaluation of test results 164
5.9.7. Preservation, packaging, marking 164
5.9.8. Guarantee 164
5.10. Aluminothermic welding materials 164
5.10.1. Scope of works 164
5.10.2. Type and quantity 165
5.10.3. Technical requirements 165
5.10.4. Acceptance conditions 165
5.11. Acceptance criteria of aluminothermic welding 167
5.11.1. Specifications for alluminothermic welding 167
5.11.2. Aluminothermic welding acceptance criteria 169
5.11.3. Marking of the welds 171
5.11.4. Ultrasonic test 172
5.11.5. Certification 172
5.11.6. Equipment 172
5.12. Machine rail butt welding 172
5.12.1. Scope of works 172
5.12.2. Quantity 173
5.12.3. Rail and line characteristics 173
5.12.4. General conditions 173
5.12.5. Welding operations 174
5.12.6. Acceptance conditions 177
5.12.7. General 177
5.12.8. Other matters 184

5.13. Fencing 189
5.14. Protective rail grinding 189
5.14.1. Scope of works 189
5.14.2. General conditions 189
5.14.3. Features of machine 190
5.14.4. Grinding operation 190
5.14.5. Grinding tolerances 191
5.14.6. Protective grinding of switches 192
5.14.7. Acceptance procedure 192
5.14.8. Cleaning 192
5.15. Ultrasonic inspection of butt welding of the rails 194
5.15.1. Scope of works 194
5.15.2. Purpose 194
5.15.3. Standards 194
5.15.4. Materials 194
5.15.5. Personnel 194
5.15.6. Device 194
5.15.7. Inspection conditions 195
5.15.8. Calibration 195
5.15.9. Inspection 195
5.15.10. Evaluation 196
5.15.11. Reporting 196
5.16. De-stressing 197
5.16.1. General 197
5.16.2. Reference standards 197
5.16.3. Definitions 197
5.16.4. Follow-up of the de-stressing 198
5.16.5. Equipment required for de-stressing 199
5.16.6. Preconditions for de-stressing 199
5.16.7. De-stressing and technical characteristics 200
5.16.8. Performing joint welding and de-stressing in the switches 203
5.16.9. Stress measurement of the line 203
5.17. Culverts 203
5.17.1. Scope of works 203
5.17.2. Applicable standards 204
6. PAVEMENT WORKS 207
6.1. Unbound gravel 207
6.1.1. Applicable standards 207
6.1.2. General 207
6.2. Bituminous mixes 214
6.2.1. Applicable standards 214
6.3. Cement treated gravel base course 224
6.3.1. Applicable standards 224
6.4. Tack coat and prime coat 232

6.4.1. Applicable standards 232
6.5. Concrete slabs 234
6.5.1. Applicable standards 234
6.6. Non-woven geotextile under storage slab 244
6.6.1. Applicable Standards 244
6.6.2. Demolition and reconstruction of service road junction 246
7. OUTSIDE ELECTRICAL WORKS 247
7.1. Applicable standards 247
7.1.1. Regulations 247
7.1.2. Standards 247
7.2. Distribution boards 248
7.2.1. General 248
7.3. Cables and trenches 248
7.3.1. Construction of trenches 248
7.4. Electrical network installation 248
7.4.1. Cabling for lighting 248
7.4.2. Other cabling 248
7.5. Lighting system installation 248
7.5.1. Lighting columns 249
7.5.2. Lights and lamps 249
7.5.3. Testing and quality control 249
8. TRANSFORMER STATION 250
8.1. Applicable standards 250
8.1.1. Regulations 250
8.1.2. Standards 250
8.2. Preparatory construction works 250
8.2.1. General functional specification of the transformer station 250
8.3. Grounding and equipotential 251
8.4. Safety equipment 251
8.5. Quality control 252
9. EXTRA LOW VOLTAGE WORKS 253
9.1. Applicable standards 253
9.2. Functional specifications 253
9.3. Fibre-optic cables 254
9.3.1. Specification of fibre-optic cable 254
9.3.2. Equipment and installation materials 254
9.3.3. Cable ducts 255
9.3.4. Laying 255
9.3.5. Finishing works 256
9.3.6. Final electrical tests 256
9.4. Outdoor cameras 256

9.4.1. Digital camera 256
9.4.2. Dome camera 257
9.4.3. Facial recognition camera 258
9.4.4. Secondary equipment 262
9.4.5. Quality control 262
9.5. Card system on gates 262
9.5.1. Input distributor of parking cards cd-b 262
9.5.2. Output reader of parking cards cr-b 263
9.5.3. Gate with straight boom opening from both sides 263
9.5.4. Other parts 263
9.5.5. Quality control 264
9.6. Quality control and acceptance of the works 264
10. LANDSCAPING AND FENCES 265
10.1. Landscaping 265
10.1.1. General 265
10.1.2. Supply and transport 265
10.1.3. Laying 266
10.1.4. Quality control 266
10.2. Fences and gates 266
10.2.1. Fence around the terminal 266
10.2.2. Gates of the terminal 267
11. WATER SUPPLY AND FIRE PROTECTION 268
11.1. Earthworks and concrete works for water supply and fire protection 268
11.1.1. Earthworks for the water main 268
11.1.2. Earthworks for the water meter manhole 268
11.1.3. Earthworks for the outside water network 269
11.1.4. Earthworks for the fire water reservoir and outside drainage 269
11.1.5. Earthworks for the outside fire hydrant network 269
11.1.6. Concrete works for water supply 270
11.1.7. Concrete works for the water meter 270
11.1.8. Concrete works for the fire water reservoir 270
11.1.9. Concrete works for the reservoir outside works and drainage 271
11.1.10. Concrete works for the fire hydrant outside network 271
11.2. Cast iron water pipes 271
11.2.1. Applicable standards 271
11.2.2. Transport and storage 272
11.2.3. Installation 272
11.3. HDPE water pipes 273
11.3.1. Applicable standards 273
11.3.2. Supply 274
11.3.3. Installation 274
11.4. Steel water pipes 274
11.4.1. Applicable standards 274
11.4.2. Installation 276

11.5. Pipes and fittings 276
11.5.1. Supply 276
11.5.2. Installation 277
11.5.3. Quality certificates 278
11.5.4. Welding 279
11.5.5. Wall passing 279
11.5.6. Adapters 279
11.5.7. Rubber compensators 280
11.5.8. Support of pipe work and valves 280
11.5.9. Bolt, nuts and washers 280
11.5.10. Ductile iron pipes and fittings 280
11.6. Valves, penstocks and actuators 281
11.7. Water meters 282
11.7.1. Applicable standards 283
11.7.2. Supply 283
11.7.3. Installation 283
11.8. Fire hydrants 283
11.8.1. Applicable standards 284
11.8.2. Material 284
11.8.3. Installation 284
11.9. Pumping equipment 285
11.9.1. General 285
11.9.2. Supply 285
11.9.3. Factory acceptance testing 286
11.9.4. Installation in the fire water reservoir technical room 286
11.9.5. Centrifugal pump 286
11.10. Hydraulic testing 286
11.11. Cleaning, disinfecting and rinsing of water pipes 288
11.11.1. Preliminary flushing 289
11.11.2. Cleansing 289
11.11.3. Disinfecting of water supply pipes 289
11.11.4. Bacteriological testing of water supply pipes 289
11.12. Pipe markings 289
12. BUILDING WORKS 290
12.1. Concrete and metal structural works 290
12.1.1. General 290
12.1.2. Applicable standards 290
12.1.3. Quality control 290
12.1.4. Reinforcement steel works 291
12.1.5. Cement mortar floor finishing 293
12.1.6. Brickwork 293
12.1.7. Rendering work 294
12.1.8. Steel roof 294
12.1.9. Ancillary steel works 295
12.1.10. Insulation 296

12.2. Facade and internal aluminum joinery 296
12.2.1. Applicable standards 296
12.2.2. Windows 299
12.2.3. External doors 299
12.2.4. Internal doors 301
12.2.5. Internal partitions 301
12.3. Internal finishing works 302
12.3.1. Applicable standards 302
12.3.2. Ceramic tiling 302
12.3.3. Plaster works 303
12.3.4. Painting works 304
12.4. External works 304
12.5. Plumbing and sewage 306
12.5.1. Water plumbing 306
12.5.2. Sewage pipes 309
12.6. Inside fire hydrant network 312
12.6.1. Galvanized steel water pipes and fittings pn10 312
12.6.2. Wall mounted fire hydrants 312
12.7. Electrical works 312
12.7.1. Applicable standards 312
12.7.2. General 313
12.7.3. Cables 313
12.7.4. Supply and install fixings and sockets 313
12.7.5. Earthing 314
12.7.6. Acceptance tests 314
12.8. Mechanical works 315
12.9. Extra Low voltage works 315
12.9.1. Video supervision system 316
12.9.2. Fire detection and alarm system 318
12.9.3. Computer – telephone installations 318
12.9.4. Alarm system installations 318
12.9.5. Access control installations 318
12.9.6. TV installations 318
12.9.7. Acceptance testing 319
13. GROUNDING AND CONNECTION SYSTEM 320
13.1.1. Viaducts 322
13.1.2. Overpasses 323
13.1.3. Platforms 324

1. GENERAL TECHNICAL REQUIREMENTS

1.1. SPECIFICATIONS AND STANDARDS

IMT works shall be realized in accordance with applicable Turkish and EU specifications and standards.

In the design, implementation, test, acceptance and operation of all the works within the scope of the tender, the Contractor should be based on latest editions of standards, with the Turkish Standards (TS) being the priority.

1.1.1. Specifications

- Article 2 Technical Specifications for Civil Works
- Technical Specifications for Public Works
- TCK (General Directorate of Highways) Technical Specifications
- Bank of Provinces Technical Specifications
- DSİ (General Directorate of State Hydraulic Works) Technical Specifications
- TEDAŞ (Turkish Electricity Distribution Corporation) Technical Specifications
- BOTAŞ (Petroleum Pipeline Corporation) Technical Specifications
- Türk Telekom Technical Specifications

1.1.2. Standards

- Turkish Standards (TS),
- Euro Norm (EN),
- International Standards Organization (ISO),
- Deutsches Institut für Normung (DIN),
- American National Standards Institute (ANSI)
- American Society for Testing and Materials (ASTM),
- American Concrete Institute (ACI),
- American Railway Engineers Association (AREA),
- American Association of State Highways and Transportation Officials (AASHTO),
- British Standards (BS)
- Union International des Chemins de Fer (UIC)

2. APPLICATION WORKS, MEASURMENTS AND INSTRUMENTATION

All kinds of applications, measurement and instrumentation in the site and in the environment that is directly or indirectly related to the works are under the responsibility of the Contractor.

The Contractor shall prepare the application plans based on the original reference points, showing the placement of the structures on the site. These plans shall include the elevation and coordinates of the building witness points and their insurance and shall become operational after the approval of the Engineer. The placement of the structures on the site shall be done by piling or other safe markings in accordance with these plans. No work shall be started unless the site placement is checked and approved by the Engineer. In order to prevent erroneous construction measurements during the work, the witness points shall be checked from the insurance points.

For application and measurement, the Contractor shall:

- Employ qualified and experienced land surveyors;
- Use modern type and high-quality topography instruments suitable for the works;
- All topography instruments used shall have new adjustment certificates and their settings shall be checked at least once every six months.

Other measurements for site control

The Contractor shall make all necessary measurements for the determination of water, ground, seismic events and the movements that may be caused by them for both construction and the related environment. These measurements shall be in the form and places that will help the structure to be executed in accordance with the designs and specifications, and to take measures to prevent the damaging results of the movements.

Within the framework of the mentioned measurements, the contractor will provide and install as follows including stationary and mobile measuring instruments as follows but not limited to;

- Determination of ground movements that may occur for various reasons and the movements to create in existing structures and excavation support systems;
- Detection of vibrations and movements due to blasting, piling and pile plank driving, earthquake, and their effects on existing structures, structures and excavation support systems;
- Detection of excessive rainfall and groundwater movements.

The contractor, for these measuring instruments and measurements shall carry out:

- Placement and use of tools;
- The recording and evaluation of the measurements;
- Detection of tool imbalances, making adjustments;

Regarding the measurements, the contractor shall prepare the measurement plan that includes;

- Usage purposes of fixed and movable measuring instruments, places to be placed or measurement points;
- The characteristics of all measuring instruments, technical features;
- Reading, evaluation and reporting periods in ordinary situations;
- Any pre-construction determination related to existing structures.

If unusual situations are detected as a result of reading and evaluations, decisions such as taking appropriate permanent and temporary measures or stopping work shall be taken together with the Engineer and shall implemented rapidly.

3. MAPPING WORKS

3.1. Mapping

1/1000 Scale Maps shall be prepared according to the Turkish Big Scale Maps Regulation numbered 6961.

The elevations of all points where reading is made in the details of the map sheets shall be written and the levelling curves (contour lines) shall be drawn. All features of the land shall be drawn with special marks with astralone inks (streams are blue, vegetation is green, contour lines are brown, ground layers are black). Triangulation, traverse and levelling points shall be marked, their numbers and elevations shall be written next to them.

The facilities such as transmission, irrigation, drinking water (of the institutions such as TELEKOM, TEDAŞ, TCK, DSİ, TKİ…) and the borrow pit, quarry and storage areas and other important points shall be specified.

The vertical curves, underpasses and overpasses, high water levels of open drains at the points where gradient changes and the locations, kms, spans and types of all engineering structures shall be indicated on the longitudinal section.

3.2. Application drawings

a) The coordinates of the main points (main points, T T B and circle start and end points and centre point), tangent lengths, arc lengths, vicinity of the directions and deviation angles shall be calculated in a controlled manner (by going through the tangential polygon and circle centres). Obtained values shall be drawn on quality tracing papers and their coordinates shall be written across the points specified by number and kilometer, and other values shall be written on the drawing.

b) The elevation and coordinate values for the intermediate points shall be given on each 10 meters in the curves and 20 meters in the straight lines.

c) For the main and intermediate points of the route with the calculated coordinates, a calculation shall be made in a way that will allow the possibility of driving pile from at least two polygon edges with rectangular coordinate system, polar coordinate system and intersection method.

d) The values for the application shall be drawn on a quality tracing paper and their calculated values shall be written on sketches.

e) The application process shall be ensured with two of the application values (according to the characteristic of the point) - one for application process and the other for the control.

f) Coordinate values of the application for the points of intersection shall be submitted.

4. CONSTRUCTION WORKS

4.1. Introduction

IMT construction works shall be carried out in the areas adjacent to the existing railway line without interrupting the railway operation. For this, the way of working, hours and times shall be determined in agreement with DGII. The Contractor is obliged to strictly comply with agreed program.

IMT works shall be realized in accordance with applicable Turkish and EU specifications and standards.

4.2. Soil works

For soil works to be done by the Contractor, a detailed plan shall be prepared that shall include:

- Location;
- Method, program, measurement, recording and tests;
- Site drainage;
- Destruction as needed;
- Security measures, support systems;
- Transport and storage, quarries and casting areas.

The Contractor is obliged to make excavations and fillings in the dimensions as shown in their drawings.

4.2.1. Excavation

Carrying out excavation

- Performing as shown in their drawings,
- Providing the necessary tools, equipment and equipment for this,
- Storage of material suitable for re-use from the excavation in the approved place,
- Supply of the dumping site for unsuitable material from the excavation, taking necessary measures in the field,
- Transporting unsuitable material to the dumping area, making the necessary correction operations after dumping,
- Protection of open surfaces from destruction following the excavation,
- Keeping the excavation site dry,
- Carrying out excavation support works, when necessary,
- Taking security measures regarding excavation,
- Adjusting the open excavation to the project dimensions by filling with the material

Removing trees, roots, fences, etc. that hinder the excavation, pulling down the building and the facility, removing of the residues out of the field, doing the other operations that may be related to the excavation regarding the open excavations are under the responsibility of the Contractor.

Keeping excavation dry

The Contractor shall take all necessary measures to keep the work place dry during the excavation and construction. For this:

- Groundwater level shall be kept under control with the piezometer setup to be installed when necessary;
- The water entering the excavation shall be collected in drainage wells at appropriate locations and shall be pumped from the excavation site. If necessary, suitable sand filters shall be used in the wells according to the type of the ground;
- In areas where a significant amount of water may come from, protection shall be made with sheet pile or cofferdam, depending on the nature of the site;
- Environmental ditches shall be constructed against surface waters, and protective site drainage shall be made.

Supporting excavations

On sites with slope where there are no open excavation opportunities, excavation supporting systems to be planned shall be used according to:

- Depth of excavation;
- Type of the floor;
- Vertical and horizontal loads.

Excavation supporting systems to be proposed according to the characteristics of the excavation areas shall be designed in a way to include the emergency measures to be taken in case of their unusual movements and

- All kinds of calculations and drawings;
- Installation and dismantling forms;
- Keeping the support under observation.

Removal and storage of excavated material

If the excavated material has been found suitable as filling material by the Engineer but it is not possible to use it immediately, it shall be stored. The Contractor shall determine the land required for the storage of suitable material.

Broken pieces of concrete or road pavement residues, pavement pieces or any debris and similar materials from excavation shall be disposed of in the same way.

4.2.2. Filling

The fillings to be built along the route shall be created from materials with the qualities to provide the slope ratio specified in the project.

In the construction areas where the ground is under the project elevation and if the natural ground cannot carry the loads coming from the superstructure that's why the weak ground is removed and filled, the material shall be selected and compacted in accordance with the issues specified in the specifications.

Vegetable soil shall be stripped in above-ground fillings, and the site shall be cleaned from all kinds of residues, roots and similar materials.

The filling material shall be brought by the Contractor from the borrow sites approved by the Engineer, if the excavation material to be provided from the excavations is not suitable or sufficient. The material shall be used after tests that confirm its suitability for filling.

Features of filing material

The filling material shall consist of solid and durable grains. The materials that meet the conditions in the filling technical specification and have the formations that have the nature of filling material specified in the geotechnical report shall be used in the filling. In this context, materials meeting the following conditions shall be used in the filling.

In the material to be used in the filling shall not contain;

- Vegetable soil;
- Organic materials such as trees, shrubs, roots, etc;
- Internal combustion material including coal, coal dust;
- Clay and marly floors saturated with swamp or water;
- Swept, debris etc. waste materials;
- Industrial wastes containing toxic substances at a rate harmful to human and environmental health;
- Snowy, icy and frozen soils, material that will crumble easily with water, causing subsidence;
- Soils containing more than 20% soluble matter such as gypsum and rock salt.

There shall be no rocks that are highly serpentinized and exhibit clay behaviour when decomposed.

Decomposition-prone rocks (marl, claystone, shale, etc.) that are distributing under water and pressure shall not be used in the production of filling.

The materials that may be used in the fillings (1.0m <H <10.0 m.) projected on the route shall meet the following conditions based on the "UIC Code 719R" Specification:

- **QS2-2.1** Grounds in the range of 5% -15% with fine material ratio (ratio of grains smaller than 0.075 mm) except for grounds with shrinkage behaviour,

- **QS2-2.2** <5% poorly graded (Cu <6) grounds with fine material ratio (ratio of grains smaller than 0.075 mm), except for grounds with shrinkage behaviour,
- **QS2-2.3** Moderately hard rock, 30 <LA≤40, must provide the desired rock fill gradation below and must be well graded (uniformity coefficient Cu> 6).
- **QS3-3.1** <5% well-grained grounds (Cu> 6) with a fine material ratio (proportion of grains smaller than 0.075 mm)
- **QS3-3.1** Hard rock, LA≤30, must provide the desired rock fill gradation below and must be well graded (uniformity coefficient Cu> 6).

Along with the above, these materials shall meet the following requirements:

- Liquid limit, LL< %35
- Plasticity index, PI<12
- Maximum dry unit weight, dmax.>1.7 t / m3
- Wet CBR > % 10

Materials containing more than 50% larger than 75 mm in weight are considered as rock filling. Materials that provide the following features (Rock Filling) shall be used in high fillings exceeding 10.0 meters in the formation of the filling sections and in all fillings shallower than 1 m:

- Los Angeles abrasion resistance shall be LA <40%
- Rock filling material shall be well graded (uniformity coefficient Cu> 6)
- The gradation limits envisaged for the rock filling material shall be as follows in percent by sieved weight

Sieve Size (mm)	Ratio (%)
200	100
75	50 – 100
4.75	< 20
0.075	< 8

Quality control tests of rock filling materials

Test Type	Standard	Minimum Test Number
Gradation	TS 1900-1, AASHTO T 88	When the gradation is changed and/or once a month
Los Angeles Abrasion	TS EN 1097-2 AASHTO T 96	When the material quality is changed and/or once every three months

In case the filling material provides the above-mentioned features, if it meets the appropriate conditions below, it will be used as filling material;

- Mechanical properties will also be investigated;
- Cohesion (c) and Friction Angle (Ø) values required for the filling slopes proposed in the project will be determined by making stability analysis;
- It will be checked whether it provides the desired safety coefficient for the filling.

Preparation of filling ground

Filling areas shall be cleaned of all kinds of trees, branches, bushes, roots and other plants, trash and unnecessary harmful materials, and after stripping the vegetative soil, the ground floor shall be blended at a depth of 20 cm and compacted to 95% tightness. If the pits that will be formed due to thick roots are deeper than 20 cm, these pits will be filled with suitable material and compressed so as not to cause depressions after filling.

For the purpose of determining the ground with low bearing capacity at the base of the filling, 1 (one) per 100 m and / or if necessary, at the places requested, Land CBR Tests shall be carried out, the filling base shall be prepared as specified in the upper paragraph by scraping the material less than CBR≤6 values for the fillings higher than 5 m and CBR≤3 for the fillings shallower than 5 m and manufacture shall be made with filling material instead. However, if the scrapping depth determined in this way is more than 1.5 m, an improvement will be made as specified in the geotechnical reports.

When the filling process coincides with the winter months, the snow and ice in the section where the filling to sit shall be cleaned, and in case of freezing on the ground, the filling shall not be started until the frost effect disappears. If there is water collected on the area to be filled on condition that it is not marsh, it will be ensured that this water is drained and removed before filling.

If the filling is made on a non-rigid, existing road, if the filling height is less than 50 cm; the surface will be swelled by ploughing at a depth of 15 cm to ensure fusion between the filling mass and the existing layers.

Settlement and compaction

Fills shall be constructed in accordance with the plans, profiles and cross section stated in the project at all points and in the cross-section that shall enable easy drainage of surface water throughout the whole embankment width after compaction.

Transporting of materials to the fill site shall be continued as long as there are sufficient spreaders and suitable compaction machines on site. Materials shall be spread by bulldozer, grader, scraper or any other machine to be approved by Engineer.

Spreading process shall be executed throughout the whole width and length of the filling and materials shall never be poured to the sections of the layer that are not previously compacted. If the number of materials stored on the site is more than the amount foreseen, then the material shall be brought to desired thickness by means of spreading or carrying out of the site.

Loose layer thickness of the rock fills is envisaged as 40 cm.

Rock fill material shall be spread, settled and then compacted by machinery such as loader or bulldozer after being poured from trucks. The material to be compacted with a maximum layer thickness of 40 cm (spread, loose) shall follow the same elevations horizontally, starting from the bottom elevations. Single blocks, whose maximum dimensions are equal to compacted layer thickness, can be used in filling. However, the large blocks shall not be permitted to surface on the compacted layer and form roughness. Each layer shall contain materials graded in suitable amounts and the spaces that might be formed on the surface shall be filled and compacted before the next layer is spread. Water shall be added to the material if needed for compaction or if the humidity of the fine part is excessive then necessary drying process shall be carried out. Above mentioned compaction procedure shall be applied exactly the same on the section corresponding to filling slope edge during the compaction of each layer and fill slope surface shall not be allowed to be loose.

Limit values of other materials that may be used when required for fillings between 1.0 <H <10.0 meters are stated above. Filling construction shall be done in a way that does not create a future settlement with the materials having the desired filling material properties from the cut excavations. In this context, weak grains shall be mechanically broken into pieces during laying and compacting and converted to real grain size, and shall be laid in such a way as to obtain a maximum of 30 cm thick compacted layers such as soil filling. If there are solid grains larger than 200 mm in size within the rocks prone to decomposition, the maximum grain size will be reduced to 200 mm and constructed in 30 cm layers.

On slopes and mixed sections and bottom sections where the horizontal distance between filling and slope bevel is 2.50 meters or less, horizontal steps shall be created in a way to provide at least 2.50 meters distancing from the filling bevel. The height of the steps shall be minimum 30 cm and maximum 60 cm. Where the slope is 5/1 (h / V) and more oblique, these steps do not need to be created, and the slope of the filling layers will be gradually reduced in such a way that the horizontal distance between the slope and the filling slope is 2.50 meters. The longitudinal slope of the step shall be the same as the road slope.

The working methods applied in building of the fillings shall not cause any engineering structure to come loose or fail. The filling construction on engineering structures shall not be started until the number of days above 5°C is more than 21 days.

The top surface and side slopes of the rock fillings shall be blinded by covering them with fine graded material. Vegetable soil may be used instead of this material on the side slopes.

Compaction criteria

In the filling process, the material shall be poured layer by layer, laid and compacted. The type and frequency of tests required for compaction control are given below:

- 95% modified proctor unit weight in filling layers, ± 2% optimum water content
- Sand Cone test: one at 50 m per layer
- Nuclear Test: one test at every 25 m in each layer (In case of nuclear tests are carried out, it is necessary to control / calibrate with a sand cone test in every 250 m platform.)
- Plate loading test (One test at every 500 m in each layer 1 test EV2> 60 MN / m2, DIN 18 134 or NF P 94 117.1)

Compaction control in rock fillings; if the total settlement amount in the last two passes of the cylinder weighing 15 tons is less than 6 mm during the pouring of the material used for filling, and compaction of each layer, it will be accepted that there is a sufficient compaction.

Quarry materials quality control tests

Minimum test types and numbers to be done on quarry materials are given in the following table.

Test type	Standard	Minimum Test number
Gradation	TS 1900-1, AASHTO T 88	1 unit at each 5000 m^3
Liquid and Plastic Limit	TS 1900-1, AASHTO T 89,90	1 unit at each 5000 m^3
Los Angeles Abrasion	TS EN 1097-2 AASHTO T 96	When gradation changes and/or one unit at each 3months
Compaction (Mod. Proctor)	TS 1900-1, AASHTO T99, T180	When the material quality changes and/or 1 at every two weeks
Wet CBR	TS 1900-2, AASHTO T 193	When the material quality changes and/or 1 at every two weeks

Highway fillings

The fillings of access roads and diversions to be constructed shall be executed in accordance with the conditions stated in T.C.K. Highways Technical Specifications.

4.2.3. Approach filling of engineering structures

Approach fillings for bridge, viaduct, underpass and culvert shall be applied according to the appropriate cross-section in the enclosed type sections.

Approach filling with granular material

Granular material (selected material) whose characteristics are given below shall be used in bridge, viaduct, underpass and culvert approach fillings;

Gradation Limits

Sieve Size	% sieved
75 mm	100
37.5 mm	85-100
19 mm	70 -100
9.5 mm	45-80
4.75 mm	30-75

0.425 mm	10-25
0.075 mm	0-8

Los Angeles abrasion resistance shall be LA <30% (TS EN 1097-2).

The material shall be well graded (uniformity coefficient Cu> 6).

MgSO4 (Frost loss) shall be <25%. (TS EN 1367-2)

Wet CBR (California Carriage Rate) shall be> 30%. (TS 1900-2)

Chemicals, slag, debris and frozen material shall not be used in the composition of this layer.

Settlement of the material

Filling and backfill material in the width of the platform shall be spread as a 20 cm thick layer and each layer shall be compacted uniformly.

Large material shall not be accumulated in a certain place. Spaces shall be filled with fine material.

It shall be compacted with an appropriate compactor to obtain the desired density.

Before compaction, humidity ratio of the material shall be brought to desired levels by drying or soaking.

Wooden beams, supports, shoring and wooden coverings shall stay in place as long as there is need for supporting excavations, near facilities and structures.

When structures and facilities are suspended in place, special equipment and techniques shall be used to obtain the desired compaction in the lower and side parts of the structure.

In structures that shall be left under the railway, filling shall not be executed without concrete sets.

For the equal distribution of the horizontal pressure, fills shall be done at equal levels at both sides of the structure.

The compaction of each layer of the filling shall not be less than 95% of the maximum dry density.

Deformation module in the second loading phase that shall be obtained from plate loading shall be Ev2 > 80 Mpa

Approach fillings with cement mix granular material

The method to be applied and the material properties to be used for Approach filling with Cement Mix Granular Material are as follows:

Scope
This method explains the criteria for applying and controlling for approach fillings.

The construction process of the approach fillings defines the compaction of the granular material by mixing it with cement to minimize the required rigidity and different settlement risks in accordance with the project drawings of the viaducts, underpasses and railway line transverse drainage works.

Materials
Materials to be used are as follows:

Granular Material (GM):

Gradation Limits

Sieve Size	% Sieved
37.5 mm	100
25 mm	72-100
19 mm	60-92
9.5 mm	40-75
4.75 mm	30-60
2.00 mm	20-45
0.425 mm	8-25
0.075 mm	0-5
LL	<35
LA	< 30
Wet CBR	> 30
Sulphate Content	< % 0,2
Organic Matter Content	< %0,2

The granular material to be used shall have the features described above and mixed with cement.

Deformation Module in layers with cemented material shall be 160 Mpa and above. If Ev1 <90 in the plate loading test, the optimum cement amount shall be determined provided that Ev2 / Ev1 S 2.2 meets the test result. However, this amount cannot be less than 4%.

Cement shall be TS EN 197 -1 NPÇ 42,5.

Application

Transition fillings shall be made according to the geometrical definition specified in their drawings. However, it may differ in some cases described below:

Application of Approach Fillings with Cement Mix Granular Material:

Making calculation

Mixing process shall not start without determining and approving the necessary calculation values. This formula contains the following values.

- Cement amount
- Optimum compression humidity
- Density value to be obtained

Surface preparation
Before laying the material, the vegetable soil and other unsuitable materials within the desired project depth shall be cleaned.

Cement mixtures:

Cement is mixed until a homogeneous mixture is obtained at the desired dosage in the plant. This mixture must have a uniform colour and no agglomeration.

The granular material shall be mixed in an amount to provide the free compressive strength indicated below. % Cement and % optimum water content ratios of the mixture shall be determined by making Cement Binder granular Basic Mix Design.

The free compressive strengths shall not be less than 35 kg/cm2 and not more than 55 kg / cm2 as a result of the test to be carried out 7 days after curing of briquettes prepared in 7 layers with Modified Proctor knocker and 62 strokes per layer in the CBR pattern with a diameter of 15.24 cm and a height of 17.78 cm in the optimum water content found with the Modified Proctor test (TS 1900) and at least 98% of the maximum dry unit weight.

Mixing shall be done in a plant to obtain the proper mix.

Transporting and discharging to the site:

The material shall be transported by dump trucks and unloaded where to be used. In order to prevent loss of moisture during the transportation, trucks shall be covered with a bran.

Irrigation:

The required amount of water shall be added to the mixture until the humidity at the calculated value is achieved. Adding appropriate amount of water to the mixture shall be done in the plant.

Laying of layers:

The mixture material shall be laid using a grader.

The thickness of the layers shall not exceed 20 cm after compression. The surfaces of the layers shall have sufficient slope to drain the water without the danger of erosion.

Work shall be stopped in rainy weather to prevent the work from being done.

Compaction of material:

The necessary parts of the test shall be done to the extent permitted by the compaction equipment dimensions, so that a link can be established between the number of passes of the equipment and the results obtained. In these tests, it shall be ensured that the deformation module of compacted material is 160 MPa. If Ev1 <90 as a result of the plate loading experiment, Ev2/Ev1 s 2.2 ratio shall be provided.

During compression, the mixture shall be loose at any depth and its humidity shall not differ by more than 2% from the specified value.

Compaction process of the cement mixture shall be started within 1 hour after the preparation of the mixture and 98% Modified Proctor density or more shall be obtained. Laying a layer on each other may be done continuously for a maximum of 4 hours. If the material laying and compression work exceeds 4 hours, the

job will stop and will not start again before 72 hours. During the stopping time, the layer laid shall be watered and the surface shall be kept moist to prevent cracking.

In close areas to the structure, the effect of compaction may be reduced by lowering layer thicknesses or using smaller compaction equipment where necessary.

Cemented filling material may only be applied when the temperature is 5 °C and above in the shade. In cases where the temperature falls below this value, production shall be postponed.

In case of frost, the Contractor is responsible for protecting the areas that may be exposed to possible effects. Damaged areas shall be removed and rebuilt.

Controls
Materials:

Granular Material Origin Control:

Identification tests shall be carried out before using a material:

- Grain distribution
- Atterberg limits
- Modified Proctor
- Organic material content
- Sulphate content

The tests must be repeated every 5,000 m³.

Cement Control:

Cement shall be physically and chemically tested according to TS EN 197-1.

Application Control:

Control Section:

This section shall be applied for each layer.

Audit:

Laying and Compaction:

The temperature shall be checked.

Tests:

The cement and water content used in the mixture shall be checked at least once a day or every 500 m² or part of the laid layer.

In order to check the homogeneity and free compressive strength of the mixture, it shall be checked whether average compressive strength of the briquettes compressed 98% after 7 days of curing by taking 1 set of samples per day is between 35-55 kg / cm2.

In addition, plate loading test shall be determined. Firstly, it shall be done in 2 or 3 steps of the total filling height including the top layer of the filling.

4.2.4. Selected material (Sub-base)

Selected material shall provide the following conditions.

To prevent rainwater from accumulating on the layer, it shall have the same slope as the under-ballast layer.

Gradation Limits

Sieve Size	% Sieved
75 mm	100
37.5 mm	85-100
19 mm	70 -100
9.5 mm	45-80
4.75 mm	30-75
0.425 mm	10-25
0.075 mm	0-8

Los Angeles abrasion resistance shall be LA <30% (TS EN 1097-2).

The material shall be well graded (uniformity coefficient Cu> 6).

MgSO4 (Frost loss) shall be <25%. (TS EN 1367-2)

Wet CBR (California Bearing Ratio) shall be> 30%. (TS 1900-2)

Chemicals, slag, debris and frozen material shall not be used in the composition of this layer.

Settlement of material:

- Filling and backfill material in the width of the platform shall be spread as a 20 cm thick layer and each layer shall be compacted uniformly
- Large material shall not be accumulated in a certain place. Spaces shall be filled with fine material
- It shall be compacted with an appropriate compactor to obtain the desired density
- Before compaction, humidity ratio of the material shall be brought to desired levels by drying or soaking
- Wooden beams, supports, shoring and wooden coverings shall stay in place as long as there is need for supporting excavations, near facilities and structures
- When structures and facilities are suspended in place, special equipment and techniques shall be used to obtain the desired compaction in the lower and side parts of the structure

- In structures that shall be left under the railway, filling shall not be executed without concrete sets
- For the equal distribution of the horizontal pressure, fillings shall be done at equal levels at both sides of the structure
- Construction tolerances that can be permitted on the platform:
    - Finished sub-base platform shall be 15 mm above and 30 mm below the stated level.
    - Finished platform gradient shall be within the desired ±15 mm gradient line.
    - The humidity of the filling shall be within the optimum humidity ratio ±%2.
    - The compaction of each layer of the filling shall not be less than 95% of the maximum dry density.
    - Deformation module in the second loading phase that shall be obtained from plate loading shall be Ev2 > 80 Mpa

The selected material thickness shall be determined according to the table below, according to the material used in the filling and the ground of the cutting base. (All filling and cutting bases shall be designed according to P3 bearing strength).

GROUND-CUTTING BASE	GROUND-FILLING	SELECTED MATERIAL	BEARING STRENGHT
QS1	-	50 cm	P3
QS2	QS2	35 cm	P3
QS3	QS3	20 cm	P3

Layer thickness of selected material

Compaction criteria

The type and frequency of tests required for compaction control are given below:

- 95% modified proctor unit weight, ± 2% optimum water content
- Sand Cone test: one test at 50 m per layer
- Nuclear Test: one test at 25 m in each layer (In the case of nuclear tests are carried out, it is necessary to control/calibrate with a sand cone experiment in every 250 m platform.)
- Plate loading test: One at 500m per layer (Ev2> 80 MPa; DIN 18 134 or NF P 94 117.1)

Selected material quality control tests

The minimum test types required on the quarry materials are given in the table below.

Test Type	Standard	Minimum Test Number
Gradation	TS 1900-1, AASHTO T 88	1 at each 1000 m3
Los Angeles Abrasion	TS EN 1097-2 AASHTO T 96	When the material quality changes and/or 1 at every three months
Compaction (Mod. Proctor)	TS 1900-1 AASHTO T99T 180	When the material quality changes and/or 1 at every two weeks
Wet CBR	TS 1900-2 AASHTO T 193	When the material quality changes and/or 1 at every two weeks

4.2.5. Borrow areas

Filling material shall be supplied from excavations as much as possible and in the event that excavation material is not suitable or sufficient, it shall be brought from borrow areas by the Contractor. Determination of borrow areas and taking, transporting and placing the material is the responsibility of the Contractor. Material shall be used after the tests confirming the suitability for filling are done and approved. After the completion of material purchasing process, the Contractor shall level the borrowed areas and leave it in orderly way.

4.2.6. Soil improvement

Soil improvement may be performed in the scope of land surveys to be carried out on-site when required.

In case that the soil of the cutting is QS2 and QS3, selected material shall be directly laid on the soil of the cutting on condition that the provisions of the specifications shall be met.

Soil improvement filling on the grounds of filling, cut, open-cut and engineering structures

The filling material to be used on weak or marshy (unstable) soil shall have the following characteristics.

If there is weak or marshy (unstable) soil at the platform base; The filling material to be used in soil improvement in line with the soil surveys to be performed on site shall be;

- Grain size 150 mm-400 mm (provided that grains smaller than 150 mm not exceeds 10%)
- Los Angeles Wear Loss <30% (TS EN 1097-2 AASHTO T 96)
- MgSO4 (Frost loss) <15% (TS EN 1367-2)
- Water Absorption Rate by Volume shall be <5%.

While the soil improvement is being applied, the filling material shall be laid on the surface, and it shall be ensured that the filling material is embedded into the soil by compressing it with a suitable cylinder. The

embedding process shall be continued until a stable filling base surface is obtained, then the filling shall be created.

In case the weak ground layer is in thicknesses that cannot be excavated (excavation stability, difficulty working under water, increase in cubage in long tulle), further improvement methods shall be designed and applied.

Advanced soil improvement

For the problems where weak soil thickness is high and cannot be solved with improving the layer and in shallow excavation cases, advanced soil improvement techniques such as using pre-loading, surcharge, vertical drain, grouting, geosynthetics shall be used alone or together with shallow soil improvement techniques.

Before determining the method to be used among the advanced soil improvement techniques, thickness of the weak soil shall be defined by drillings, slide resistance of the ground and settlement characteristics shall be identified by land (SPT, CPT etc.) and laboratory tests (triaxial compression, consolidation etc.) and project shall be prepared.

Advanced Improvement Techniques, Pre-Loading, Surcharge, Loading in Increments, Vertical Drain Method, using Geotextiles, Jet Grout and Gabion implementation shall be performed in accordance with KGM (General Directorate of Roads) Specifications, Deep Compaction, Stone Column construction and using Steel Wires shall be conducted in accordance with the Specifications given below.

Soil reinforcement and improvement with deep compaction and stone columns

General description of the method

It means the soil improvement and reinforcement by manufacturing columns having high density within the soil by providing grained materials.

Purpose and suitable soils

i. Increase in the bearing capacity and slide resistance;
ii. Settlements and decrease in the compatibility, decrease in the settlement time;
iii. Removing the liquefaction and lateral expansion risks in case of earthquake.

Stone columns are generally implemented on the soils which are in the range of very soft and solid clay-silt (slide range without drainage is 15-50 kN/m2). Because it is observed that organic and very soft clays and silts show continuous creep displacement under the load (resistance without drainage < 15 kPa), stone columns shall be supported with bounding mixtures (cement, lime) or shall be covered with geosynthetic sheath.

Deep compaction method by using vibrofloat shall be implemented on sandy soil conditions where relative compactness is less than 50%, rate of fine material is less than 15% and SPT resistances are N<20 impact /30 cm.

Preparation

Before starting the construction, a comprehensive project report and construction drawing sheets are required. The purpose of the improvement, improvement criteria and targets shall be indicated clearly in the project report.

Radius, depth, settlement geometry according to foundation and column plan, distance of the intervals, minimum allowable stress of the soil, settlements in short and long terms, settlement-time, target safety factors and target parameters for slope stability, bearing capacity and safety factors of the column, performance criteria of the structure to be constructed and appropriateness of the design shall be identified clearly in the project.

Calculation methods used in the design for the bearing capacity and settlements shall be compatible with the following references in general terms:

i. DIN 4017 Shear Failure Calculations with Vertical and Central Loading, 1979

ii. British Standard: Execution of special Technical Works – Ground Treatment by Deep Vibrations BS EN 14731:2005

iii. US Department of Transportation: Design and Construction of Stone Columns 1983

iv. Hughes J.M.O and Whithers, N.J: Reinforcing Soft Cohesive Soils with Stone Columns, Ground Engineering Vol.7, No:3, pp:42-49, 1974

v. Preibe H.J.: The Design of Vibro Replacement, Ground Engineering, Dec. 1995, p.p:31-37

Manufacturing methods

Following various methods are used in the systems constructed with stone columns and deep compaction which is performed by using vibration systems:

a) Wet-top feed

b) Dry-top feed

c) Dry-bottom feed

d) Compacted sand piling

e) Rammed Stone Columns

f) Impacted Stone Columns

Wet-Top feed system

Desired depth is achieved by using vibrofloat water jet in this method. Water jet helps vibrofloat proceeding in the soil, ensures the stability of the hole against collapse thanks to the consistent water circulation and enables the gravel inserted in the hole being dispersed smoothly. In particular, stability of the hole is critical in the soft soils where water table is high and this method is preferred in these cases.

When the drill reaches the required depth, the well is cleaned with water jet by moving the vibrator up and down and then the vibrator is taken to the surface and stone fill material of 0.3 m and 1.0 m height is unloaded into the well. Then, column material is compressed by immersing the vibrator to the stone fill and column diameter is widened by postponing laterally. Thus, the consolidation of the column with natural ground is ensured. This operation is iteratively maintained until the well is filled.

The advantages of this method can be arranged as it is fast, it can proceed in firm and hard grounds, it ensures the well stability, the composition of full-scale column, the columns have a high carrying capacity factor and it does not impose any restriction for the gradation of stone fill material. The disadvantage is that a great quantity of water (2000-4000 gallon per hour) is used during the column manufacturing and the storage and discharge of the dirty water in the shape of slurry constitute a problem. The implementation of the method in the residential and small areas grows difficult. The gradation of broken stone is in the range of 20 mm-75 mm and obtainable column diameters can change between 600 mm and 1200 mm.

Dry-Top feed system

The only difference of this system from the wet top feed system is that the water jet is not used in this system during the drilling operation. In this implementation, the well shall be stable during the phase of placing the vibrator on the surface. Thus, undrained sliding strength is predominantly used in cohesive soils in the range of 30-60 kN/m². In some implementations pressure air is used instead of water jet. The underground water shall be under the depth of rehabilitation in order to implement the method. This method is slower than the wet method. In case of the vibrator shall be waited in the well in order to contribute the well stability, grain size of the stone column material shall be limited to 25 mm. Their column diameters and column carrying capacities are less than the wet method. The most important advantage of this method is not to use water. The gradation of broken stone is in the range of 40 mm-75 mm and obtainable column diameters can change between 400 mm and 700 mm.

Dry-Bottom feed system

The vibrator is fastened to the end of a steel tube in this system. A second tube in the shape of tremie pipe and material feeding bucket are installed to the system. The feeding pipe is lowered to the determined depth with the vibrator and air jet can also be used in the beginning phase of the drill. During the lifting up the system, bottom hole fills up with the stone fill material flowing from the feeding pipe. Then, the column material is compressed by immersing the vibrator to the stone fill and column diameter is widened by postponing laterally. This operation is iteratively maintained until the well is filled.

This method is the most appropriate method for soft cohesive soils in which the well stability shall be critical and the progress shall be easy. Continuous existence of the pipe in the well prevents the well collapses. The column diameters obtained with this system are 15-25 % less than wet method.

The gradation of broken stone is in the range of 10 mm-50 mm and obtainable column diameters can change between 500 mm and 1000 mm.

Compressed sand piles

The systems occur a heavy vibrator installed on the steel pipe and a reservoir which shall feed sand into the pipe. Apart from the other methods, the vibrator implements vertical vibrations in this system. The coat of the steel pipe running on with vibrator power is filled with sand and the system is lifted up in specific depths and the sand is compressed to the sand fill in the well ground with vibration and column diameter is widened by postponing laterally. This operation is iteratively maintained until the well is filled and the coat is removed from the well.

Compressed sand pile method can be implemented both for cohesive and non-cohesive soils. In the implementation, the pipe diameters of steel coated can change between 40 cm and 150 cm and the sand

column diameters may be increased to several meters dimension depending on the ground conditions and vibrator power.

Rammed broken stone columns

A well is drilled in a certain diameter and depth envisaged in the design by using borer in this method. The diameters of the well are changeable and it is ranked as 750 mm. The broken stone having maximum 50 mm grain dimension and approximately 30 cm thickness is placed into the well. The broken stone layer is compressed by ramming with high-speed vibration with a special rammer in the well diameter. With this compression, the broken stone layer creates a bottom bulb by widening laterally and compresses laterally the soft ground in its surrounding. The rammer is removed from the well and the well is filled with the broken stone having 30 cm thickness again and compressed with vibration. These operations are incrementally repeated until to the surface of the well and a stone column is created.

Impact broken stone columns

A well is created by hammering the empty shaft of which its lower end is in the shape of a special cylindrical compressed head, to the ground with vibration. During the creation of the well, the soil is not removed from the well and is deferred laterally. When going down the bottom hole, the broken stone put at the top is filled into the shaft. The broken stone is drained to the ground of the well through the shaft and special squeeze head by lifting up the shaft from the bottom hole. The broken stone, which is spilled to the well ground with an overhead vibration system, is compressed vertically. So, a bulb occurs by widening laterally and the ground around the bulb is compressed laterally. Sufficient number of broken stone is drained on the bulb on condition that the shaft in the well is lifted up again. The composition of the column is maintained by repeating the vibrated compression operation and the same operations is incrementally maintained until they reach to the desired length.

Materials

Broken stone in different gradation or natural sand-gravel materials are used for the availability of the column composition depending on the ground conditions to be rehabilitated and the method to be implemented. It is suggested to obtain the broken stone as unweathered, hard, the wearing value of Loss Angeles less than 45 % (ASTM C131) in 5000 rotation and competent rocks, which do not exceed 15 % of the weight loss in magnesium-sulphate resistance test (ASTM C88). The following gradations are not binding and give an idea about the type of the gradations to be used in accordance with the method.

Wet-top feed:	20 mm- 75 mm
Dry-top feed:	40 mm- 75 mm
Dry- bottom feed:	10 mm- 50 mmm

Tolerances

Implementation points and deviation from the vertical line

The implementation points shown in the plan of the project shall be appliqued as numbered to their places on the site and there will not be any deviation more than ± 15 cm. The depths shall be realized with maximum 15 cm deviation by measuring in compliance with the project and site grading level and the vertical deviation shall be maximum 1/20. There shall be maximum 10 % difference for the completed column diameters than the amount determined in its project. All the tolerances are valid for the limited (maximum 5 %) productions.

Site records and site works
During the manufacturing of the column, it is useful to keep the following records and evaluate them:

- Top and bottom elevation of every column
- The amount of the material placed to the column
- The amount of the swelling or collapses occurred on the surface of the ground
- The usage of the force for the vibrator during the drilling and compression
- The completion phases of the drill and column
- Water or air jet pressures
- Challenges, delays and unexpected situations

Grained unsorted material shall be laid out to operate the machines on the site and regulate the elevation and working level shall be determined.

Excessive remoulding and stone usage for the soft clays shall be avoided, there will not be an excessive compression for the last meter of the column and if there is a ground swelling, it shall be cleaned and it shall be stricken off the level.

If there are obstacles such as construction relics and great natural blocks, the principles for eliminating them shall be determined between the contractor and the Engineer / DGII.

During the completion phase of the construction in the implementation area, blanket of the grained material shall be laid out on the columns and they shall be compressed by the conventional cylinders together with column heads. The thickness of the blanket is determined within the scope of the project and it will not be less than 30 cm.

Site loading tests
Quality control for vibrio-compression implementations, which are valid for sandy grounds, are realized by Standard Penetration Test (SPT), Conic Penetration Test (CPT), Dilatometer or Pressiometer (self-drilling type) Tests performed in the middle of the distance between the columns. Also, geophysical surveys can be especially used for the quality control of the vibrio-compression implementations. The goal for the design phase of the rehabilitation degree criteria on these grounds is determined as SPT bearing, CPT point bearing, and Pressiometer or dilatometer deformation module. Determination of whether the targeted parameters, determined in design phase during the construction, are reached between the columns are sufficient for the quality control.

It is suggested for the control of the column rigidities to perform short term plate loading test on a single column for 5 % or 10% of the manufactured columns. These tests shall comply with "ASTM Standard D1194-87: Carrying Capacity and Natural Foundations under the Static Loadings".

However, the behavior of the composite mass occurred by a natural ground and stone column, which are constructed by vibrio-replacement method, is complex and to estimate the long term behaviours with loading tests performed on a single column gives misleading results, thus, long term loading test shall be performed on the column groups for the important designs. These tests shall include the loading of 3 or 4 columns as a group in the middle of the group occurred by manufactured 9 and 12 columns and the tests

shall continue until the consolidation shall be completed 995%. Settlements, the change of the settlements with depth, settlement-time relation, stresses on the column and natural ground during the tests shall be measured and evaluated. Single column and group loading numbers shall be determined by the designer within the scope of the project. If the columns are used for preventing the landslide or mass sliding, it is suggested to perform horizontal shear tests to determine the sliding strength of the composite mass.

Instrumental observation

Displacements of the loaded columns shall be measured single and in group. Loading-displacement measurements like pile loading tests for small groups such as single and three columns shall be realized. Fixing plates, mechanic or magnetic extensometers shall be used under the fillings.

Steel mesh usage (Steel Composite grid BO)

This section covers the application of Steel Composite Grid - BO (Double Direction Reinforced Steel Wire Mesh) in slopes, likely to be surface landslides with rock and stone fall. Within the scope of this work, it is found the production and assembly of the Steel Composite Grid which is formed by reinforcing in the perpendicular direction both to and from the production direction (BiOriented) with the Galfan (%95 Zn - %5 Al) Coated Steel Ropes united with a steel network after the assembly of hexagonal pore and twisted steel wire meshes on the cutting surface or under factory conditions,

The composite material shall consist of Galfan coated double twisted steel rope mesh and Galfan coated steel rope components. The steel ropes to be used may be obtained both by binding the twisted hexagonal pore wire meshes with the wire mesh after mounting on the cutting surface, and by binding the ropes with the wire mesh during the production phase.

Steel Composite Grid (Reinforced Steel Wire Mesh) material shall consist of two different materials. These materials are;

- Galfan (95% Zn - 5% Al) coated Steel Wire Meshes with hexagonal structure,
- For reinforcement purposes, Galfan (95% Zn - 5% Al) Coated Steel Rope Reinforcement binded with hexagonal pore wire mesh rolls, both in the direction of production and perpendicular to the direction production, in the factory or during application, on site conditions,

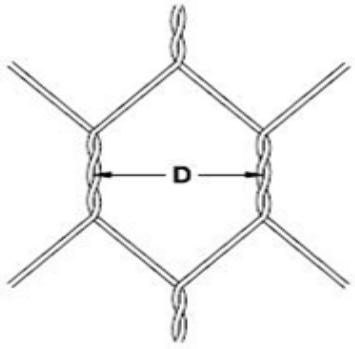

Steel composite grid material

The double twisted steel wire mesh pore structure is hexagonal and the clearance value "D" shall indicate the clearance between the two double twists.

BiOriented reinforced steel composite grid

Steel Composite Grid (BiOriented) material shall be obtained in the production process of 8 mm Galfan coated steel ropes in the direction of production and in the direction of the production of different types of spacing and on the edges of the standard 3 mm rolls in the production direction and perpendicular (longitudinal and transverse direction) or with its montage in the site conditions.

BiOriented steel composite grid material

The ropes for reinforcement shown in the picture may be made both at the factory during the production and at the site conditions during the application.

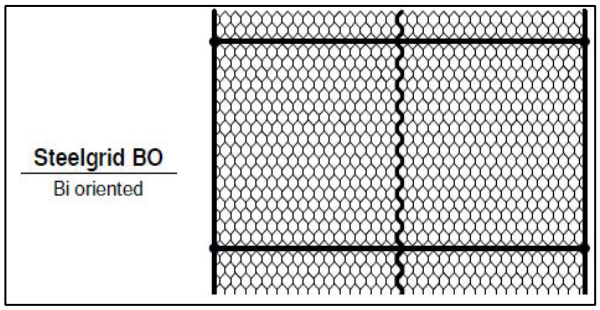

Features of steel wires in steel composite grid material

Enlightenment regarding properties and physical features of steel wires to be used in the hexagonal pore steel wire mesh structure of the composite grid material shall be found this section.

Pore wire

Hexagonal pores of double twisted steel mesh shall be made of mild steel wires with Galfan (95% Zn - 5% Al) coating in accordance with the principles specified in EN 10223 - 3 Standard. Wire thicknesses to be used in Double Twisted Galfan Coated Steel Meshes according to their pore sizes are given in the table below.

PORE SIZES OF STEEL WIRE MESH (mm)	PORE CLEARENCE IN SHORT DIRECTION, "D" (mm)	TOLERANCE VALUES OF PORE SIZES	THICHKNESS OF THE STEEL WIRE (Ø, mm)	THICKNESS OF EDGE STEEL WIRE(mm)
80 x 100	80	+ %16 - %4	3,00	3.90

Wire and pore structure of the steel wire mesh in steel composite grid material

Steel wire

- ✓ **Tensile Strength:** Steel Wires used in the Wire Mesh structure of Steel Composite Grid material shall have 380 - 550 N / mm2 tensile strength in the tensile test to be carried out in accordance with the EN 10223-3 Standard and before entering the double twist.
- ✓ **Wire Elongation Amount:** In the tensile test in accordance with EN 10223-3 Standard on Steel Wires to be used in Wire Mesh structure of Steel Composite Grid material, the elongation to be

taken place on the wire shall not be less than 10%. The sample wire length to be used during the test shall be minimum 25 cm in length.

- ✓ **Galfan Coating and Properties:** Steel Wires to be used in the Wire Mesh structure of the Steel Composite Grid material shall be Galfan* coated in terms of its longevity against corrosion. Coating amounts of wires used in Steel Composite Grid material production shall be in accordance with EN 10244-2 Class A Standard and shall provide the values given in the table below. (Here, minimum coating amounts to be used depending on wire thicknesses are given).

STEEL WIRE MESH EDGE WIRE (mm)	3,90
WIRE THICKNESS OF STEEL WIRE MESH STRUCTURE (Ø, mm)	3,00
WIRE THICKNESS TOLERANCE OF STEEL WIRE MESH STRUCTURE (± mm)	0,07
MINIMUM GALFAN KAPLAMA MİKTARI (gr/m^2)	265,0
GANLFAN COATING AMOUNT OF STEEL WIRE MESH EDGE WIRE (gr/m^2)	285,0

Thickness of steel wire and coating

(*) Galfan Coating is a type of coating that contains 5% Aluminium of the classic Galvanized Coating. Galfan coatings are more resistant to corrosion due to the Aluminium they contain, compared to conventional Galvanized coatings.

- **Adhesion of Galfan Coating with Wire:** The adhesion of the Galfan coating with the wire applied on the steel wire to be used in the Wire Mesh structure of the Steel Composite Grid material shall be determined as follows: When the Galfan coated steel wire is winded 6 turns around a cylinder which is 4 times its diameter and trying to scrape with a nail tip, it shall not show flaking or cracking in accordance with EN 10223-3 Standard. 3,2,4
- **Time dependant Wear of Galfan Coating:** Accelerated aging test in SO2 (Sulphur Di Oxide) solution for measuring the time dependent resistance of Galfan coating on the steel wire to be used in the Wire Mesh structure of the Steel Composite Grid material shall be carried out in accordance with the EN ISO 6988 Standard. 3,2,5

Features of the steel ropes in steel composite grid material

Information on the qualities and properties of the Steel Rope reinforcement used for reinforcement in Steel Composite Grid materials will be included in this section.

Galfan coated Steel Ropes used in Steel Composite Grid material and to be used for reinforcement in the joints and middle of Steel Composite Grid material rolls; shall be produced in accordance with EN 10264-2, DIN 3060 and ISO 2408 Standards.

Steel Ropes to be used in Steel Composite Grid Material;

- The diameter of the Steel Ropes to be used in the direction of manufacture and perpendicular to the direction of manufacture shall be minimum 8.00 mm.
- Steel Ropes to be used in composite material shall be Galfan coated in accordance with EN 10264-2 Class B Standard.
- The physical structure of Steel Ropes shall be of 6x7 IWR (Hemp Core) type (Figure 4) and compliance of this material with EN 12385-4 and ISO 2408 Standards shall be ensured.
- The minimum tensile strength of the Steel Rope used in composite material shall be 1770 N / mm2.
- The minimum breaking load of the Steel Rope to be used in composite material shall be 40.3 kN.

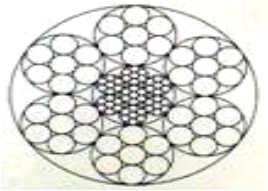

6x7 IWR (Hemp Centered) steel rope structure

Roll binding details of steep composite grid material

Information about the binding apparatus required for joining Steel Composite Grid Material rolls and explanations regarding the use of these apparatus will be included in this section.

The attachment point of each roll shall be united by knitting with 2.4mm galfan-covered binding wires. As an alternative to steel wire mesh, clamping rings may be used to unite the rolls. At the end of the joining to be done by using a binding wire or a tie ring, if 8.00 mm ropes are not united with wire mesh at the factory during production, the montage of 8.00 mm steel ropes for reinforcement on the surface will be made transverse and longitudinal. (Steel rope reinforcement may be done at the manufacturing stage or at the application stage at the site)

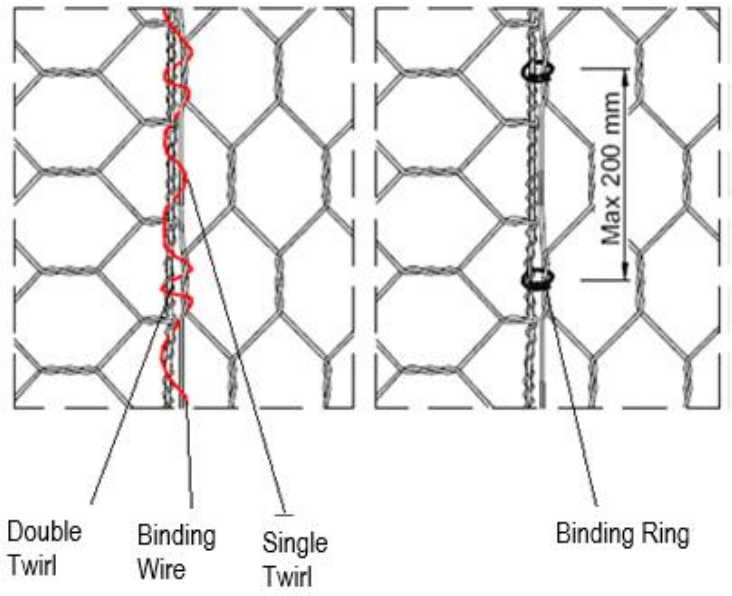

Steel composite grid binding type

Quality documents and certificates of steel composite grid material

Quality and assurance documents of the material to be applied as Steel Composite Grid, test reports and manufacturing drawings of the material shall be submitted to the Engineer and the Employer/DGII before works commencement.

4.3. Concrete works

The works described in this section refers to implementation of proportion, mixing, transport, placement, formwork, curing, surface correction works of the concrete to be used in all bearing system and pile concretes and any other concrete production according to the contract, drawings and the instructions of the Engineer.

All concrete works shall be realized in accordance with applicable Turkish and EU specifications and standards.

The Contractor is responsible for manufacturing the concrete to be used in the construction of the work, in accordance with the specifications records and project values and placing it in place and protecting it until it reaches its final strength.

4.3.1. Concrete materials

Cement

The cement complying with the standards shall be used due to the status of the structure and the periphery. The Contractor has to submit the approved laboratory reports related to this group material in every cement delivery. Material tests shall be valid for 40 days. The cement not used during this period shall be removed in the event that it is re-tested and found not suitable at the end of new tests.

Bag cement shall be stored on raised wooden grounded, dry media protected against the effects of the atmosphere,

Bulk cement shall be started in protected cement silos built for this purpose.

The damaged or opened bags shall be removed from the site.

Aggregates

Aggregate, crushed stone in accordance with TS-706 or sieved and washed granulometric gravel and sand mixture shall be used.

All of the aggregate materials to be used shall comply with specifications records and shall be supplied from a resource that is approved and proven to have been used in concrete production before.

Aggregate shall be free from clay, adhesive layers and organic substances that shall cause rusting of the rigging or deterioration of the resistance of the concrete.

Aggregate clusters shall be adjusted in such a way not to mix with piles in other dimensions and precaution shall be taken so that there is no disintegration in granulometer. Cleaning and granulometrical inspection of the aggregate shall be done with the samples to be taken from blending point.

Sand clusters shall be kept waiting and drained and it shall be ensured that the cluster is in homogenous humidity.

The Contractor shall deliver 50 kg samples from each type of aggregate. Samples shall be used for the comparisons during the execution of the work.

Water

Water to be used in concrete, mixture and curing shall be supplied from an approved spring. Water shall be clean and free from harmful substances without humus.

Water shall not affect the resistance of concrete and mixture and shall not cause discoloration in hardened concrete and mixture.

It shall not be permitted to use the water in concrete works whose characteristics and contents cannot meet the limits stated in specifications.

Mixing water shall not contain harmful amounts of oil, acid, base, salt, organic material and other harmful materials. In comparative tests with distilled water; low resistance, a certain change in setting time (more than 30 minutes) or a decrease of more than 10% in norm strength shall be sufficient reason for the rejection of water.

Additives

If proper workability in concrete cannot be achieved in complex or heavily reinforced elements without using additives, the Engineer may request the use of additives to correct workability in concrete.

When necessary and approved, the additives to be used in the concrete shall comply with the relevant specifications. These shall be the products manufactured to be used in the concrete. The effects of additives on fresh and hardened concrete shall be certified in detail and similar uses of these additives shall be evidenced with reports.

Additives shall be added to the mixture together with water and methods to ensure a certain amount and even spread over the entire mixture.

Additives that contain chlorine and nitrate shall not be used. In the event that more than one additive is used, conformity of these with each other shall be demonstrated at tests.

Additives shall not be used without Engineer's approval and during the implementation the instructions and recommendations of the manufacturer shall be followed.

Additives shall be stored in such a way to prevent contamination, evaporation and damage. Materials shall be diligently protected against frost and major temperature changes.

4.3.2. Concrete mixtures

The type of concrete to be used in every part of the building and its strength specified in its project shall not be less than the limit values shown in the specifications. To ensure this, the Contractor is responsible for producing concrete by using quality material at calculated and tested proportions.

Mixtures belonging to the concrete classes shall be prepared by the Contractor. As another option, mixtures given for the concrete class 22.5 N / mm² may be used unless otherwise required in the contract. The class of concrete is shown according to the minimum 28-day cube strength.

The cement content in any mixture shall not exceed 540 kg / m3. The rate of water to be used shall be determined in such a way as to provide enough workability for placing the concrete in the desired place as required.

The amount of water used shall not exceed the amount that is sufficient to provide the workability required for pouring and compacting concrete at the desired locations. A detailed chemical analysis of mixing water taken from any source shall be carried out before use.

The contractor shall not use mud, silt, clay or other foreign materials such as muddy, shallow, marsh, unless a filter system is used. There shall be at least 60 cm deep water under the suction pipe.

Using a low permeable, durable concrete dense aggregate and a sufficiently low water-cement ratio shall be achieved with cure methods that will provide complete compaction and sufficient hydration. The Contractor shall perform necessary tests to obtain the best mixture and strength results in its own laboratory or in another accredited laboratory, upon the request of the Engineer.

The minimum cement content shall be determined by the Contractor after the tests are performed for each concrete class.

Concrete shall not be prepared with higher water-cement ratios than determined in preliminary tests. If the placement of the concrete is inadequate, the water and cement content will be increased in a way to maintain the same water-cement ratio. Both additions shall be made in the concrete mixer.

Table: Mixture designs

Concrete Class: N/mm² Aggregate size: mm	Min. cement amount in concrete kg/m²	Minimum compressive strength (15 cm cube) of mixture	
		Laboratory value N/mm²	Site value N/mm²
52.5 / 37.5	375	62.5	52.5
52.5 / 20	405	62.5	52.5
52.5 / 10	450	62.5	52.5
45 / 37.5	345	55.0	45.0
45 / 20	360	55.0	45.0
45 / 10	390	55.0	45.0
37.5 / 37.5	320	47.5	37.5
37.5 / 20	335	47.5	37.5
37.5 / 10	365	47.5	37.5
30 / 37.5	300	40.0	30.0
30 / 20	315	40.0	30.0
30 / 10	345	40.0	30.0
22.5 / 37.5	280	32.5	25.5
22.5 / 20	305	32.5	25.5

Table: Standard mixtures								
Strength of at least 28 days concrete class cube	Dry sand weight in 50 kg cement	Weight of dry gravel and coarse aggregate crushed from the rock in 50 kg cement						
N / mm²	kg	Max.(Size) 10mm	Max. (size) 20 mm			Max. (size) 37.5 mm		
Workability slump (mm)	-	Very low	Low	Medium	High	Low	Medium	High
		0 - 6	12.5 - 25	25 - 50	50 - 125	25 - 50	50 -100	100 - 175
Compaction factor		0.80 - 0.86	0.82 -0.88	0.88 -0.94	0.94 -0.97	0.82 -0.88	0.88 -0.94	0.94 - 0.97
30	65	100	145	115	90	170	135	115
22.5	100		190	160	135	125	190	170

Note: Cement shall be in accordance with TS 19 or TS 20.

If the specific weight of the coarse or fine aggregate quite differs from the value of 2.6, the weight of each type of aggregate will be adjusted in proportion to the specific weight of the materials.

Weights are given according to the rate that complies with the gradation limits given in TS 706 and TS 3530.

CP 114 Article 209 (a): See the use of reinforced concrete in buildings.

If crushed stone sand or crushed gravel sand is used instead of the sand, the coarse aggregate mass shall be reduced by at least 10 kg without changing the weight of the sand.

Mixtures tests

The Contractor shall calculate aggregate, cement and water mixture ratios alternatively within the frame of the specification's records for each concrete class to be used. At least 35 days prior to Concrete Production, calculated test mixtures shall be prepared in a laboratory to be approved by Engineer. Concrete samples to be received from each mixture shall be tested. In these tests:

- Air pocket,
- Consistency,
- Fresh and hardened concrete densities,

- Pressure resistance,
- Production method and equipment, mixing duration.

Concrete characteristics shall be determined. Based on the results of the tests, mixture ratios shall be decided according to concrete types. These approved mixtures shall be used in concrete production. None of the structure concrete shall be manufactured without being approved by the Engineer.

Any changes to the mixture calculation or materials shall require new mixture tests.

When the mixture is certified, no changes shall be made without the permission of the Engineer, who may need to perform new tests on the mixture ratios, the source of the material or the type, size and granulometry of the aggregate.

The Engineer may also request that practical tests be carried out in the site by filling the test patterns to determine whether the mixture is suitable for the actual work. In these tests, the type of machine used for mixing, the method of compaction, and the formwork surface shall be similar to those used in the main works in all respects.

If the Contractor wishes to buy pre-cast concrete components manufactured in the factory with the evidence that the factory regularly produces in accordance with the specification, the laboratory tests may be abandoned together with the mixture tests. Evidence shall include details of the mixture ratios, water/cement ratio, degree of workability of concrete and the strength it receives in 7 to 28 days.

In case of providing concrete from ready mixed concrete facilities; It will be determined whether the materials comply with the specification after carrying out tests specified in the relevant standard takes the sufficient and representative samples from each of the materials to be used in production (Aggregate, cement, water, chemical and mineral additives).

Adjusting The mixture

The Contractor shall ensure that concrete production equipment continuously operate on the planned level. The Engineer shall demand test manufacturing and test of the samples to be taken from manufacturing before concrete production is started. In the event of a negative result, necessary amendments shall be done in the mixture. Moreover, humidity content of the aggregate shall be checked and adjustments shall be done in amount of water when necessary. Similar adjustments shall be done in the event that additives are used.

4.3.3. Transport and storage of materials

Concrete aggregate shall not be contaminated and mixed with foreign substances during transportation and storage at the construction site. Aggregates shall be stored on a flat and hard surface, preventing mixing with foreign materials. If the aggregate is placed above ground, the substrates will not be used until they are cleaned again.

The coarse aggregate shall be brought to the site in separate sizes. (If the largest size is 20 mm, it is 2 sizes, if the largest size is more than 37.5 mm, it is 3 sizes)

The aggregate brought to the construction site shall be kept separate from harmful materials. The aggregate passing through a 5 mm sieve shall be stored where it will be mixed at least 8 hours before use. Aggregates

in different sizes shall be stored in different warehouses or in separate partitioned storage places and kept separate from each other.

Fine aggregates supplied from different sources shall not be stored in the same place and shall not be used interchangeably for the same mixture or concrete class.

Cement shall be protected from moisture during transportation and storage. There shall be no cement residues or foreign material residues of different types or lower strength classes in carrier trucks, drums or silos. In suspicious cases, careful checks must be carried out.

The cement shall be transferred to a closed or wooden floored warehouse or silo as soon as it arrives at the construction site. The cement supply shall be planned in a way that will not hinder the concrete works: it shall be brought in appropriate amounts so that there is no interruption or break in the concrete pouring work. Cement supplied without bags shall be put in impermeable silos. Cement shall be soilless and fluid at the time of use. Cement stored for a long time shall be tested with the norm strength test and shall not be used without approval.

4.3.4. Mixing the concrete

Proper operation of all materials and water weighing and control devices shall be ensured. Their sensitivity shall be in accordance with Turkish Standards and DIN and shall be checked with precise weights and volumes.

Aggregate quantities measured with all cement and working tools shall be within the 5% margin of error of the mass for each mixture. Adjustments shall be made considering the free water content in the coarse and fine aggregate mass. The water to be added to the mixture shall be reduced according to the water content in the fine and coarse aggregate. This shall be determined by the Contractor using a method approved by the Engineer just before the start of the mixing process.

Concrete shall be mixed in blend type mixers manufactured according to BS 1305 or in a blend type mixer with a mixing capacity within the limits given in Table 5 of BS 1305. In appropriate conditions, the blending capacity, loading method, mixing time and speed of the drum shall comply with the details in accordance with the requirements in BS 3963 for the mixture that is the closest to the mixing ratios used. The mixing blades of the hopper mixers shall be kept within the margin of error specified by the manufacturer, and when this cannot be achieved, the blades shall be replaced.

Mixers that have not been used for more than 30 minutes shall be thoroughly cleaned before a new mixture. The first concrete blend that passes through the mixer shall cover 2/3 of the normal coarse aggregate amount. The mixing plant shall be completely cleaned before switching from one cement type to another. Concrete that has made its first hardening or partially hardened shall not be used and mixed again.

The temperatures when water and cement are added to the mixture shall not exceed 65°C and 80°C, as mentioned. If the temperature of the water exceeds 60°C, the water shall be mixed with aggregates before cement is added.

Concrete shall not be poured when the air temperature is below 3°C in the shade. Frozen or ice-containing material shall not be used.

4.3.5. Transfer and pouring of concrete

Concrete shall be transported in a way to prevent contamination, decomposition and loss.

All formworks and equipment shall be cleaned from water, snow, ice, sawdust, construction residues and other harmful materials. Pouring shall not be done on frozen grounds and iced formworks.

The temperature of the concrete shall be minimum 5°C and maximum 32°C after pouring. The concrete shall be compacted and finalized 30 minutes after leaving the mixer. If the concrete is transported in special mixers, it shall be finalized within 2 hours after adding cement to the mixture or 30 minutes after leaving the special mixer.

Concrete shall be poured as 50 cm compressed layers while vibrators are being used, in other cases 30 cm compressed layers.

When using carrier buckets or gutters, they shall be washed properly and used to prevent decomposition. Concrete shall not be poured or pumped through aluminium or aluminium alloy pipes. The slopes of use shall not be more perpendicular than 1 vertical 2 horizontal and not be more oblique than 1 vertical 3 horizontal. In cases where the pouring line is longer than 6 meters and the slope cannot be provided, the pouring shall be made via concrete buckets with bottom lids.

Concrete shall not be poured into the running water. Underwater concrete shall be poured through tremie pipe or from mixer with pump. All details regarding the placement method shall be submitted to the Engineer in advance and necessary approvals shall be obtained. If tremie pipe is used, its dimensions and usage style shall be determined in agreement with the Engineer. While pouring concrete underwater, pumping and water discharge operations in the surrounding shall be stopped until the approval of the Engineer.

After that, concrete shall be poured continuously over the area between the construction joints. Unless the construction joint is made in accordance with the Technical Specification, new concrete shall not be placed on the cast-in-place concrete that has been formed for more than 30 minutes.

In case the environmental temperature drops below 10°C, no pouring shall be made without the permission of the Engineer. No pouring shall be done if the ambient temperature drops below 0°C. In compulsory situations, concrete may be poured by taking all necessary precautions, especially to increase the environmental temperature, and with the approval of the Engineer.

4.3.6. Transport of concrete

Concrete shall be transported in mixers operated continuously and designed for this purpose.

Adding water into the mixture shall be executed in the central facility or in the place where concrete shall be poured. This shall never be executed during transportation.

Temperature shall not be lower than 100C or higher than 320C when concrete is poured. Concrete shall be placed and compacted 1,5 – 2,0 30 hours at the latest after leaving the mixer.

4.3.7. Pumped concrete

Concrete pouring with pump shall be made by order of the Engineer after the approval of the properly adjusted mixture design and pre-mixture tests.

When the transportation and placement of concrete is done with mechanical pressure, it shall be ensured that the equipment used is suitable for the type and capacity and vibrations to damage the newly poured concrete shall be prevented. The operation of the pump shall be in a way that ensures the continuous concrete is removed from the spray pipe without contamination and separation at the end of the work.

After this operation, all equipment shall be thoroughly cleaned.

4.3.8. Compaction of concrete

All of the concretes shall be compacted in such a way to constitute a dense homogenous mass. Compaction shall be done by mechanical vibrators as described below.

Vibrators shall be as approved by the Engineer. Vibration frequencies of vibrators shall not be less than 4500 vibrations per minute. The vibration intensity shall be enough to affect a 45 cm radius mass for concrete with a 5 cm slump. In case of failure, enough spare vibrators shall be kept in working order to prevent disruption of work.

Vibration shall be applied at the pouring point and in the fresh concrete area. Vibrators shall be immersed in concrete and extracted from concrete gradually. The vibration shall be long and severe enough to provide full compaction, but not long enough and severe enough to cause disintegration. Long-term vibration shall not be done long enough to form localized mortar points. When using vibrators inside the concrete, the vibrator shall not be touched on the reinforcement and the parts placed in the concrete. Vibration shall not be reached to the concrete layers that has lost its plasticity via reinforcement and started to hardening. Vibrators shall not be used for concrete transfer in the formwork, they shall not be used to facilitate the flow of concrete (not to provide disintegration). Correction and compaction shall be done with shovel and trowel on the surfaces and corners (where the vibrator cannot reach) to provide flat surfaces. Concrete shall not be exposed to the vibration between 4 and 24 hours after compaction.

Vibrators shall be used by skilled workers and fresh concrete shall not be allowed to be transported and moved via vibrator. The vibrator use time shall be sufficient to ensure the well compaction of concrete but not long enough to cause disintegration. After the concrete water comes to the surface, vibration shall be stopped.

The precautions and principles specified shall also apply to ready-mixed concrete elements, but external vibration or the manufacturer's own methods may be used.

4.3.9. Cure of concrete

After compaction and for 7 days, concrete shall be protected from harmful weather effects, rain, sudden temperature changes and soot. The protection method to be used is subject to the approval of the Engineer.

Curing methods and durations shall be determined to ensure that the concrete reaches the required strength and durability and to provide the least possible deformation and to prevent cracks caused by shrinkage. In order to achieve these goals, it may be necessary to isolate the concrete (in order to keep it at a constant

temperature and/or keep the amount of evaporated moisture constant). Different curing and watering processes shall be required for different elements.

Alternatively, when curing by raising the temperature, the temperature shall be started to increase after 4 hours of concrete pouring. The temperature increase in periods as half an hour shall not exceed 10°C and the highest temperature obtained shall not exceed 70°C. Subsequently, the cooling rate must not exceed the heating rate.

If necessary, it must be ensured that the same elements are subjected to the cure under the same conditions as possible.

The cure shall usually be in the form of keeping the formwork in place, watering, covering it with sand, polyethylene cover or any absorbent material by keeping the moisture of the concrete. The Engineer shall select the best type of cover in line with the conditions.

4.3.10. Early loading

Except for the provisions of this section, concrete shall never be subjected to pressure loads at the time of loading or more than 0.33 of its 28-day strength (including its own weight).

4.3.11. Transport, placement and storage of ready reinforced elements

The elements shall be supported from the points specified in the Contract and shall be transported and placed without crashing. The support points shall be selected in such a way that the stresses do not exceed the permissible design range when storing the elements.

4.3.12. Production of ready mixed concrete elements outside the site

The approval of the Engineer shall be obtained for the production method before the work begins. The Contractor shall notify the Engineer about the production dates and types of elements before the start of production.

A copy of the 28-day cube test results related to the works shall be delivered to the Engineer as early as possible.

All elements shall be indelibly marked with the element signs described in the contract and the date of pouring and the top face shall be indicated, and if the element is symmetrical, marks indicating which face will be the top shall be engraved on the elements. These marks shall be placed so that the elements do not appear when they take their place.

4.3.13. Concrete control tests

In parallel to the progress of the Work, tests and controls related to the concrete materials and processes shall be conducted. Negative test results shall cause the rejection of the related parts of the work.

During the course of the Work, test sets shall be prepared with the samples to be taken from the concrete prepared every day and from each concrete in different quality. Each test set shall be composed of 4 samples taken with standard 150 mm diameter and 300 mm long cylinders. Separate samples shall be taken from concrete (foundation, elevation, header beam, deck, etc.) of each structural element of engineering

structures poured separately such as Bridge, Viaduct, Culvert and Retaining Wall etc. Test set number that should be taken according to the amount of concrete poured in a day:

Amount of Concrete Poured in a Day	Necessary Test Number
0-50 m3/day	1 sets
50-125 m3/day	2 sets
Each additional 75 m3/day	Additional 1 set

1 sample from each set shall be tested 7 days later and 3 samples after 28 days. The number of tests giving results under the specified resistance level shall be below 10%.

In the event of doubt in concrete resistance due to any reason, the Engineer may request testing by taking drilling core. In that event, pulsed hammer, sonoscope or another harmless tool shall be used to determine the places of drilling core and evaluated the concrete resistance on site.

4.3.14. Potential cement aggregate reaction

If the acid-soluble alkali content of cement, called sodium oxide and calculated as Na2O + 0.658 K2O, is greater than 0.6% by weight, examinations shall be made to determine the ability of the cement-aggregate composition to react with potential alkalis and in accordance with ASTM C227.

The contractor shall also carry out petrographic testing of each aggregate that he recommends to be used in the works to identify substances sensitive to the potential alkali reaction in the aggregate. The tests should be carried out in accordance with ASTM C295.

If the petrographic examination results indicate that there are elements that may react with potential alkali-carbonate, the Contractor shall perform tests in accordance with ASTM C586 and report the results to the Engineer. Based on all these examinations and tests, the Engineer shall decide whether the proposed aggregate is suitable for the work.

4.3.15. Protection of concrete surfaces

Protection of concrete surfaces deemed appropriate by the Engineer shall be provided with the material whose application, type and characteristics are as specified below.

To protect the finished concrete surfaces against atmospheric effects, sulphate, chlorine and water wastes as a whole, prevent corrosion by processing 10-15 cm on concrete surfaces and provide mass concrete protection, provide water insulation up to the 10 atm water pressure by making it waterproof through wrapping around the reinforcement inside the concrete and protect it against corrosion.

All these characteristics shall be confirmed by test reports and the surface protection material shall be applied in accordance with the manufacturer recommendations.

Properties required in concrete to which the material is applied; it shall have permeability with CRDÇ-48-7 test method max. 211 psi positive or negative and shall not change the concrete's own strength in the compressive strength test according to ASTMC-190 and shall increase the normal value of the concrete by

an average of 25% in the abrasion test made with ASTMC-944-85 and shall protect the opposite concrete, and protect the reinforcement inside the concrete against corrosion.

4.4. Formworks

Construction, assembly and disassembly of formworks, supporting scaffold, all kinds of formwork support systems required for coating of inner side of steel or standard formworks with special rubber or plastic is the responsibility of the Contractor to provide the pouring of the concrete in the shapes, sizes and elevations shown in their drawings, and also to provide a decorative appearance.

The formwork shall be made of steel, wood or any other material and shall be sufficiently resistant to meet the pressure that will arise during concrete placement and vibration, without deformation or displacement.

Before pouring the concrete, it shall be placed enough material on the formwork and it shall be ensured that the formwork does not break the concrete while being removed.

Soil excavation surfaces shall not be used instead of vertical surface formworks unless deemed necessary or allowed.

4.4.1. Materials

Preparation of the concrete formworks:

Formwork and formwork surfaces or scaffoldings supported by formwork scaffolding, work scaffolding and uprights shall be made of high-quality timber or other approved material and sufficient strength and hardness shall be obtained to ensure minimum deformation during placement and compaction.

Metal formworks:

Specifications that apply to wood formworks are also required for metal formworks. The metal used for the formwork shall be thick enough to keep the formwork in shape. All screws and welding heads shall be buried. Formwork assembly shall be planned to support the concrete as much as necessary and to be removed without damaging it. Formwork surfaces that are not flat or have connection defects shall not be used.

Internal connection or dividers:

Approval of the Engineer shall be obtained for the use of steel or plastic internal connections and brackets. They shall be planned to leave the smallest possible gap when metal connections are removed.

4.4.2. Construction requirements

General

Formworks shall include all required supports and all temporary and permanent surfaces.

All formworks shall be planned to prevent loss of concrete. After hardening, the concrete shall be as specified in the contract.

In any case with a slope of more than 15°, the formwork shall be fastened to ensure sufficient compaction.

Carrier concrete shall not be poured on soil or gravel instead of formwork.

When internal connections or dividers are used, they shall be removed without any damage to concrete. After opening the formwork, the empty areas shall be filled with the appropriate mixture. A layer of concrete of at least 5 cm shall be placed over the rough metal pieces.

Scaffolding

It shall be ensured that the feet of scaffolding deliver equal loads to the soil and step on solid soil (stabilized if necessary).

Scaffolding and formworks shall be adjusted to give carrier system deflections within the limits shown in the drawings.

When calculating the strength of scaffolding and formworks, fresh concrete weight shall be accepted as 2600 kg / m3.

Formwork calculation and assembly

Formworks shall be calculated and projected taking into account the horizontal and vertical external loads, concrete weight, additional effects to occur during concrete placement and vibration. Formworks shall be supported in such a way that they do not perform undesirable movements.

The support system shall be calculated to prevent horizontal and vertical movements in the whole or any part of the formwork during the placing of the concrete.

In the places where deflection is expected, reverse deflection shall be given to balance the formwork.

Formworks shall be made of steel, wood or any other suitable material, but not to cause material loss from concrete. Formworks shall be tight enough to prevent loss of grout from concrete and necessary precautions shall be taken at the joints where leakage and flows may occur.

When the formwork bond is used, permanent bonds shall be placed at least 2 cm from the concrete surface, and the bonds to be removed shall be covered with an anti-stain adherence inhibitor. Gaps shall be filled with mortar.

An approved coating substance to prevent the adhesion of the concrete and to not stain the concrete surface shall be applied to the formwork surfaces or covered.

Temporary spacing shall be made at the bottom of the column and wall formworks and at the places required by the Engineer for cleaning and control to be performed before concrete pouring.

Unless necessary and without permission, soil excavation surfaces shall not be used instead of vertical formwork.

Concrete surfaces with architectural features shall be designed with the necessary appearance. Concrete formworks with architectural features shall be observed continuously while placing concrete, and shall be provided in the desired height placement form, distension or concavity. If any weakness occurs during the construction and the formwork becomes unnecessary collapse or deformation, the work shall be stopped, the continuously damaged construction shall be removed and the formwork shall be reinforced.

Removal of formwork

Removal of the formworks shall be done by ensuring the safety of the whole structure.

When the structure is supported with buttresses, the formworks belonging to the beam sides, columns and similar vertical parts may be removed after 24 hours provided that the concrete hardens so as not to be damaged by the disassembly.

The support formworks and buttresses shall not be removed until the structural parts reach the strength that can safely bear their own weight and any possible construction and storage load. In such parts, the decision to disassemble shall not be made without obtaining 7-day strength results.

In the case of formwork removal or re-support based on the concrete reaching a specified strength, the concrete shall be assumed to reach this strength if any of the following conditions are met.

If the test samples stored in the same curing conditions with the concrete, they represent reach the specified strength for the formwork removal.

If the concrete is cured within the same duration with the samples that are cured in the laboratory and reaches sufficient strength and the air temperature in contact with the concrete when the concrete in the building is cured is above 10°C and if it is determined by the total number of days or parts of the concrete which is completely protected from the wet, evaporation and moisture loss without the need for sequential numbers.

4.5. Reinforcement steel works

4.5.1. Scope

The contractor is responsible for:

- the supply and transportation of all kinds of auxiliary materials of steel reinforcement to be used in reinforced concrete construction
- cutting, bending and placing in accordance with its designs
- and protection of them until the concrete casting.

4.5.2. Material

The Contractor shall submit the manufacturer test certificates the to the Engineer for every parcel of the bar or ready-made reinforcement carried to the workplace. These certificates shall include casting analysis of steel, equivalent carbon content, tensile and bending test results. The Engineer may also request tests by taking samples from the material in the workplace.

4.5.3. Bar reinforcements

There shall not be a kick, bend or damage in the bar reinforcements of reinforced concrete and unless otherwise specified, St IIIb class reinforcement shall be used:

Unless otherwise specified in the standards, reinforcement bars to be used in concrete and minimum yield stresses shall be:

420 N/cm2 - 220 N/cm2 for main reinforcement

220 N/cm2 for stirrup

4.5.4. Ready-made reinforcements

Unless otherwise specified in the drawings or reinforcement list, factory-made welded steel reinforcement shall comply with the approved ready-made reinforcement standard and be manufactured according to the standard of cold drawn steel.

Unless otherwise required in the Contract, ready-made reinforcement shall be delivered to the construction site in flat sheets. The minimum yield limit shall be 500 N/cm2.

4.5.5. Tests and test certificate of the manufacturer

The Contractor shall provide the test certificate of the manufacturer and submit it to the Engineer for every parcel of bar or ready-made reinforcement delivered to the construction site. This certificate shall include casting analysis of the steel used, equivalent carbon content, tensile, bending and re-bending test results and workshop brand.

4.5.6. Bar ranges

The ranges of the bars shall be as specified or in the drawings. Deviations from the specified range shall not be more than 1.5 cm.

4.5.7. Distances from the concrete surface

The cover shall be as specified in the below or in the drawings.

In mating surfaces with rock and soil	7.5 cm
In mating surfaces with water	5.0 cm
In floor, beam and column	3.0 cm

However, they can be reduced according to the cover diameters of the distance bars of the stirrups and similar second-class reinforcements.

4.5.8. Storage

All reinforcement materials shall be protected from mechanical damage or surface deterioration, rust or similar damage until they are replaced.

Reinforcement material stored at the construction site shall be extended on planking or pillars that are spaced appropriately and placed on which the none of the part of iron shall contact with the ground.

If the air is dry and the storage period is low, the stored reinforcement may not be covered; however, if it rains, the bars shall be stored muffled.

Steels of different type and diameter shall be stored separately.

4.5.9. Surface conditions and additional measurements

There shall be no mud, oil and similar substances on the metal reinforcement surface during the pouring of the concrete, which will adversely affect the bond forming capacity.

Before the concreting, the reinforcement shall be subjected to a final check by the Engineer and if it is not found satisfactory, it shall be corrected.

The following additional measures shall be taken for the environments where atmospheric salt concentrations contaminate the reinforcement unacceptably and there is rusty wind blowing and avalanche falling:

Before the usage, the rust in the reinforcement shall be cleaned with the sandblasting method. Reinforcement shall be observed one day after this cleaning. If new rust has been observed, the cleaning shall be repeated.

If the reinforcement shall not be used immediately after sandblasting and before installation, it shall be protected by wrapping tightly with an impermeable layer.

If the installed reinforcement shall not be used for a long time, it shall be covered with an impermeable layer and concreted within three days after the installation.

Reinforcements that have spilled from the previously poured concrete, such as crude metals, shall be tightly wrapped with an impermeable material.

They shall carry out a very strict check to prevent deterioration of the reinforcement (for example, the destruction that employees shall make when walking on it).

The rust on the reinforcement shall be cleaned with a wire brush or sandblasting just before concreting.

4.5.10. Preparation and placement of the reinforcement

The Contractor shall perform the supply, cutting, bending and placement of the steel reinforcements shown in the drawings or requested in other ways including bars and ready-made elements. All reinforcement steels shall be free from oil, grease and similar substances or loose parts, rust or particles that will prevent or reduce adherence. It shall not be permitted to use reinforcement as current transmitter while welding. The reinforcement shall be stored clean on the ground and protected from contamination of other substances. All reinforcements including the crude metals shall be properly preserved until embedded in concrete.

4.5.11. Cutting and bending

Cutting and bending lists

The Contractor shall be responsible for providing correct information when providing bending ruler and bar list for his usage, cutting rulers for steel meshes and the reinforcement steel that will prepare type lists according to the information from the drawings and specification separately for each structure.

Approval of the mentioned cutting and bending lists does not relieve the Contractor from the responsibility of preparing reinforcement according to the project and/or standards.

Cutting and bending of plain bars

It shall be cut from plain bars without kink, bend or other damage on the steel reinforcement and bent cold by expert workers. The bars larger than 19 mm in diameter shall be prepared by bending machines designed for this purpose and approved by the Engineer.

The bar shall be cut and bent precisely as shown in the reinforcement project. Unless a permission is obtained from the Engineer, bending of bars by heating shall not be applied.

Temporary bending of the reinforcement and re-using it by rectification shall be avoided. The process shall be carried out at ambient temperature and the inside of such bends shall be at least 4 times of the diameter of the structure for soft steel and at least 6 times of the diameter in the high-tension reinforcement and possible cracks in the bending part shall be observed.

Cutting of steel meshes

If necessary, steel meshes shall be cut straight from the plate. It shall be noted that the material loss is low in the cutting process.

4.5.12. Placement

All steel reinforcement shall be placed precisely to the locations shown in the plans and drawings and it shall be ensured that the concrete will not be dislodged during casting and setting. The reinforcement bars shall be connected from the intersection points and the bent ends of the connection wires shall be turned into the concrete. 1.2 mm diameter stainless steel wires shall be used for open bottom construction site elements. In other cases, soft iron wires with a diameter of 1.6 mm shall be used. At all intersection points, except for those with a spacing less than 30 cm, the bars shall be connected bidirectional and they shall be connected cross in sections with a spacing of less than 30 cm.

During the placement, the covers shall be elaborated in compliance with the specified conditions. Apart from the situations specifically mentioned in their drawings, the covers shall be:

In mating surfaces with rock and soil	7.5 cm
In mating surfaces with water	5.0 cm
In floor, beam and column	3.0 cm

All reinforcements shall be protected against displacements outside the limits below.

The on-site cover shall not be less than the desired normal cover, which is minus 5 mm. In cases where the reinforcement is placed on only one side of any element (for example, plain reinforcement in the floor), the actual share of the desired cover shall not be more than:

In the bars of 6 mm (including Ø 16)	5 mm
In the bars between 16 mm and 25 mm (including Ø 25)	10 mm
In the bars over 25 mm	15 mm

The distance between reinforcement and steel elements in the mold shall be provided with the help of pillar, block, tie, hanger and other certified elements. The blocks that prevent the contact of the reinforcement with the mold surface shall consist of the certified metal parts made of mortar in the certified sizes.

4.5.13. Pillars

Reinforcement shall be retained by using metal or concrete pillars, spacers or ties. The mentioned pillars shall be strong enough to retain the reinforcement during the concreting. The pillars shall be used in a way that they will not be seen after molding or cause discoloration or deterioration in concrete. Concrete cover elements shall be made of concrete prepared with the concrete mixture formula of the building where it will be used.

4.5.14. Overlapping length of the bars and steel mesh

Unless otherwise stated, the overlapping lengths of the bars shall be at least 50 times length of their diameter and the bars shall be laid as cross.

Overlapping of the steel mesh in various sections shall be generally done as follows:

Obtaining a mesh by overlapping two steel meshes and connecting them at 45 cm intervals (Both steel mesh layers are measured in the longitudinal direction).

Obtaining a mesh by bringing two steel mesh together and tying them at 90 cm intervals.

4.5.15. Welding

Welding or spot-weld is prohibited unless shown in the design documents approved by the Engineer. The reinforcement, which is welded inappropriately and unexpectedly, shall be replaced.

4.5.16. Mesh reinforcement or tensioned metal reinforcement

The welded steel mesh or tensioned metal meshes is used for gunite and shotcrete works or flooring instead of reinforcement bars. Collateral meshes should be overlapped from the edges and at least one intersection point afterwards. The longitudinal length of the intersection point should be in the direction shown in the project.

If the upper part of the steel mesh supported by a steel frame is used in a flooring and this upper part extends from two sides to the beam by one-third of the beam opening, the mentioned upper part shall not be cut in one-third of the beam opening and extended along the opening.

If the top additional mesh reinforcement is shown in the opening, this mesh shall be placed to cross among the upper reinforcements in the beam. In all interior corners of the flooring holes, the pieces of 22 cm, 45 cm and etc. in stairway landing shall be placed diagonally in the top corners of the floor.

4.5.17. Approvement before concreting

Before the concrete is poured, a placed reinforcement shall be checked and approved by the Engineer. Any concrete that has been poured except for the above conditions shall be disassembled together with the reinforcement and a new one shall be prepared.

4.6. Concrete structure

The Contractor is responsible for carrying out:

- Jointing,
- Water trap installation,
- Placing other embedded parts, transitions,
- Preparation of molded, moldless surfaces

of the concrete/reinforced concrete structure and similar processes in accordance with their designs and specifications.

4.6.1. Joints and joint fillers

Construction joints

Construction joints are realized to facilitate the construction and in some cases control shrinkage cracks. They shall be proposed by the Contractor, where the construction joints are not shown in drawings, in order to facilitate the working method.

Construction joints are realized for one piece construction and felting.

In the construction joint, a wooden lath with corrugated steel shall be sticked practically on the unfinished concrete surface and then retracted. In the construction joints, the previous poured concrete surface should be clean and dry and before the concrete placed next to it is poured, the process of exposing the ends of all cement foam, trash and coarse aggregate can be realized with a wire brush or water jet while the concrete is still fresh. Before the neighboring concrete is poured, any damaged concrete should be broken and thrown away. In horizontal construction joints, the thickness of the first layer of the new concrete to be poured shall not exceed 150 mm and attention shall be paid to prevent the thin material from flowing at the base of the new layer.

In the declaration of the method, the Contractor shall provide the locations of the horizontal and vertical construction joints that are not shown in the drawings and detailed recommendations on the sequence of concreting for each structure.

The sequence of the construction joints shall be arranged in such a way as to minimize the tensions arising from the first thermal shrinkage movements.

Expansion joints

Horizontal and vertical expansion joints shall be created where the movements caused by the material or the mass of the building will affect the structure.

Expansion joint hollows shall be provided with filling material or shaped and chamfered molds to be placed on the previously poured concrete surface.

Reinforcement or other embedded metal elements in the concrete shall not be allowed to be continuous throughout the expansion joint.

Joint fillers

Joint filling material shall be used in the joints that require closure or felting.

Before the filling material is placed, the joint gap shall be thoroughly cleaned, all dirt and oil shall be removed by grinding. In addition, all loose surface debris shall be cleaned with sand and compressed air, the joint gaps shall be free from accumulated rainwater, etc. and kept dry to ensure maximum adhesion.

The filler shall comply with climatic and environmental conditions and be resistant to biological deterioration.

The Contractor shall submit the certificates of the filler to be used for each structure group that include:

- Manufacturer, manufacturing test reports,
- The warranty period,
- Terms of use.

The filler shall be either Elastoplast-like polymer bitumen or equivalent certified material.

After the filling works are completed, a 50 mm piece shall be cut out from the material and the dimensions and adherence to the concrete surface shall be checked. One "cut-out" test shall be carried out at every 20 m joint filling.

Joint felting

Expansion, shrinkage and when available, joints in construction joints are subject to the approval of the Engineer and shall be carefully constructed according to the manufacturer's recommendations.

The Contractor shall show the necessary attention to avoid flaking off the edges of joint gaps. The joint gap in the expansion joints can be created by placing the filler on the concrete surface and then cutting it to the desired depth with a special cutting tool. Alternatively, the expansion joints can be formed by pre-formed PVC or chamfered molds made of wood and with bevelled edges for ease of removal.

Before the feltant is placed, the joint gap shall be thoroughly cleaned and all dirt and oil shall be removed by grinding method. Just before filling the joint gap, all loose surface debris, sand and dust shall be cleaned with compressed air and the joint gaps shall be free from accumulated rainwater, etc. and kept dry to ensure maximum adhesion.

Joint feltants shall be carefully selected in accordance with the climatic and environmental conditions to be exposed in any case and resistant to biological deterioration. The Contractor shall submit to the approval of the Engineer, the certificates that include the recommendations of the manufacturer, the warranty period and the appropriate placement method for each separate structure group.

When requested by the Engineer, a hiding tape shall be applied to protect the concrete surface and joint edges in the joint during priming and first coat operations. These hiding tapes shall be carefully adhered and ensure that the feltant is in smooth edges after the joint felting is realized.

Joint release agent for shrinkage and sliding joints

When it is made with polysulphide-based materials for felting in shrinkage joints, the outer concrete surfaces shall not be painted with bituminous substances due to its reaction. In such cases, joint release agent shall be realized with polyethylene tape or plastic tape material.

Sliding joints shall be formed with approved and two layers of 1 mm thick plastic tape material.

4.6.2. Water traps

Water traps shall be used in all joints where felting is required. Water traps shall be made of materials resistant to chlorine, sulphate compounds and corrosive substances in the environment.

There shall be records showing the conformity of water traps in terms of usage area. The Contractor shall submit detailed information and test reports regarding to these materials to the approval of the Engineer.

Water trap tapes shall be manufactured from the rolled PVC or nitrile rubber and be at the general shapes and sizes shown in the drawings. They shall be supplied from experienced manufacturers and be in the latest shape and mold used in the industry. Water trap properties should comply with TSI 3078.

Rubber or PVC water trap tapes should be compatible for storage, preservation, installation in the temperature range from 0° C to 50° C.

The attention shall be paid in order to prevent the damage to the water trap tapes. There shall be ring holes in the water trap tapes for installation. If there are no ring holes and there are no bands made for nailing, they shall not be nailed.

If concrete is poured and compacted during and around concrete pouring, water trap tapes shall not be moved.

The addition of water trap tapes shall normally be realized by clamping and welding or adhesive bonding in accordance with the recommendation of the manufacturer.

Placement of water trap tapes shall be realized with a minimum 25mm between the water trap tape and the reinforcement.

4.6.3. Components embedded to the concrete

The embedded components contain all kinds of metal parts that will be placed in the concrete during casting and placed with permanent connections.

The Contractor shall draw up the lists required for the examination and recognition of the parts brought to the construction site.

Supporting anchorages and anchorage boxes required for all construction and installation items,

- Embedded installation pipes and similar parts,
- Cases for temporary and permanent holes,
- Record boxes for the gaps as required by the transitions

shall be placed before the pouring of the concrete. The Contractor shall place the relevant parts to the correct places shown in the drawings with the required attention. The components shall be placed attentively and their connections shall be made without any movement during concrete pouring.

The Contractor shall take measures to prevent the components from being damaged due to salt, moisture and other.

The reinforcements shall not be cut, bent or relocated during the placement of embedded components, cases and recording boxes.

After the placement and connections are approved by the Engineer, the concrete pouring shall begin.

The sleeves, inserting parts, anchorage slots and holes are temporarily filled with a material that can be easily removed and the penetration of the concrete into such gaps shall be prevented.

The embedded components shall be provided unpainted unless otherwise specified. The protective paints of the components to be embedded shall be realized according to drawings and the method specified.

4.6.4. Preparation of the surfaces following the molding

After the molds are removed, the visible surfaces shall be subjected to the required processes and finalized.

Rough shaped surfaces: burrs and currents more than 7 mm shall be chipped or wiped and left in the texture given by the molds.

Uniform shaped surfaces: the mold surface material shall be of the kind that will create smooth, hard and homogeneous texture such as plywood, wood or hair. All connection holes shall be closed and all burrs shall be removed.

Faded surfaces: the finishing process shall begin the day after the mold is removed. The surfaces shall be wiped with wetted carborundum brick or other abrasive until homogeneous colour and texture are obtained.

4.6.5. Preparation of the shapeless surfaces

Finishing the moldless surfaces shall be realized following the jigging and levelling.

Rough textured surfaces: Immediately after the levelling, a hard brush, rake or broom shall be realized and a nulled rough texture shall be provided.

Even surfaces: After the luminosity of the water has passed and the surface treatment has realized in two stages. After the first polishing process, all the asperities shall be shaved and all the recesses shall be filled. After this process, a second polishing process shall begin and a homogeneous colour and texture shall be achieved.

4.6.6. Repairing the surface discontinuities

Connection holes, defects caused by mold or mold removal shall be repaired immediately after mold removal. The attention shall be paid to ensure that the repair is realized by taking all necessary precautions to avoid creating a patch appearance on the laitance and not breaking easily from the main block. The repair mortar to be used shall not be lower than the strength of the poured concrete.

The repair mortar to be used shall not be lower than the strength of the poured concrete.

4.7. Piling

If piles are required to be used in the foundations of building, these shall be planned as cast in site pile and raker pile shall be avoided.

4.7.1. Cast in site pile fabricating

The processes before the application

Regarding to the pile fabricating, the Contractor shall submit the planning that includes the detailed information on:

- Piling equipment and platform,
- Installing reinforcement,
- Concrete mix, concrete placement, compaction,
- Control methods,
- Timing,
- Removing the excavation material from the site, to the approval of the Engineer.

Application

The excavation, reinforcement placement and concreting shall be realized through the sheath made of steel.

- At the end of the excavation, after the control of the Engineer, the reinforcement shall be placed. The Contractor is responsible for taking measures to prevent the reinforcement from moving during concreting. After the reinforcement is placed, concreting shall be started with the approval of the Engineer.
- Necessary tools, equipment and labor shall be provided by the Contractor for the controls.
- Concreting shall be realized with the help of concrete funnels and without interruption. While the cladding is removed during the pouring, the attention shall be paid to ensure that enough amount of concrete remains in the casing to prevent possible constrictions.

The deviation in a completed pile shall not be more than:

10 cm in horizontal

L/100 in vertical

- Excavation material shall be taken to the suitable places that will not prevent further works and removed from the work site at certain intervals.
- Before the construction of the main structure begins, defective concrete shall be cleaned to make the connection of the pile head to the structure as desired.

4.7.2. Pile loading tests

Horizontal and vertical loading tests shall be carried out at the piles to control whether the acceptance in the project is correct and determine the project amendments that may be required following the results.

The Contractor shall plan:

- Loading platform capable of transferring the test loads to the pile, which is loaded,

- Loading method and equipment,
- Loading and unloading stages, waiting periods,
- Measuring instruments and measuring methods that can accurately measure the movements of the pile head, in accordance with the specifications and following the approval of the Engineer, he shall provide, install and implement the system.

After tests are completed, the system shall be demounted and removed and there shall be no obstacle to work in the site. The reports that include the load-settlement, load-time and settlement-time curves regarding to the experiment shall be prepared and the evaluations shall be made for piles and superstructure acceptances.

4.8. Ground anchors

4.8.1. General

Anchoring is a tension bar, which is fixed to the solid ground and keeps the end part strained by means of a grouting-formed root. Various technologies are used for rock and ground anchors used to support the bracing systems. The tests, which are required to be performed for the type of the anchors, technical features and acceptance of anchors considered to be implemented shall be provided in this specification.

4.8.2. Anchor type and technical features

The technical features of the anchors to be used in supporting the excavation walls are given below.

Anchor type

The anchors to be used are temporary type and the service period shall be at least 2 years.

Pre-Stressing bundle

The pre-stressing bundle to be used in anchors shall be in accordance with BS 5896-1980. The pre-stressing bundles to be used should be selected in such a way that the breaking load and anchorage service load provide the values given in the project. The anchorage service load shall not be more than 60% of the breaking load of the pre-stressing bundles.

Anchor head

The anchor head consists of a pre-stressing head that keeps the pre-stressed ropes in tension and a support plate that transfers the load applied to the wires to the bracing system. The tensioning head and locking system should be capable of keeping the steel ropes strained at the project load. The tensioning head should allow to increase or decrease the load during the first pre-stressing before locking.

Pre-stressing system

The jack to be used in the application of the pre-stressing should be able to stretch all the ropes at once. The ropes shall not be strained one by one in any way. The calibration of the pre-stressing jack shall be provided by an official institution at the beginning of the project and submitted to the Engineer for an approval.

Anchorage manufacturing technologies

Various technologies are used in the anchorage manufacturing and the Contractor shall submit the manufacturing technology and details to the Engineer before manufacturing. All manufactured anchorages shall be checked with acceptance tests detailed below and only anchorages meeting the necessary conditions shall be accepted.

Acceptance tests

Acceptance test should be carried out on each anchorage included in the project. In the acceptance test, the anchorage is loaded and unloaded twice up to 1.25 times of the project load (T) and locked to the locking load provided in the anchorage project, which provides the required performance. Loading stages should be selected as 1.10 T, 0.50 T, 1.0 T, 1.25 T, 1.0 T, 0.5 T, 0.10 T. In the first loading, it shall be waited until the extension of the anchor rod is read at each load stage. In the second loading, it shall be waited 1 minute for each load stage. In the second loading, only it shall be waited 15 minutes at 1.25 T level. Extensions at the beginning and end of the waiting period shall be recorded at each load stage.

The load-extension graph obtained during this process should give the estimated length of the free part of the anchorage rod with calculation. The anchors that provide it are loaded up to the locking load given in the project and locked at this load.

The results shall be presented in the form of a load-displacement graph and displayed along with the theoretical elastic line of the free part of the anchor rods. This elastic displacement should be close to the theoretical displacement with the displacement curve discharge section. Large differences indicate that there is a difference between the actual free anchorage length and the project or the anchoring irons are peeled off. In this case, anchoring is not accepted and no fee is paid. In the event that anchors cannot reach the project load during stretching, the anchors are not accepted and payment is not made. Anchors in this case shall need to be replaced.

4.8.3. Land registrations

Two reports shall be prepared on anchorages. The first of the report shall include drilling, anchorage placement and drilling method, grounds passed, machine type and model, hole diameter, slope and length, grouting type, amount, water/cement ratio, cement type regarding to the grouting and other necessary information.

The second report is about the pre-stressing process and shall include the other information;

- Anchor length, free length, root length
- Pre-stressing bundle, diameter, type, number, elastic modulus
- Tensioning jack, type, model, capacity
- Displacement readings at each load level
- Load-displacement graph
- Elastic and plastic extension amounts
- Locking load

S 8081 (1981) Standards shall be applied to other related processes not described here.

4.9. Steel construction

The Contractor is responsible for steel construction works taking into consideration:

- Supply of its material,
- Manufacturing,
- Taking anti-corrosion measures,
- Installation.

The main material, connection materials and equipment of the steel structure shall be of the type, shape and quality determined by the design.

The Contractor is obliged to issue "Certificates", which show the quality of all steel structure materials to be used.

The minimum tensile strength of the welding electrodes to be used shall not be less than the strength of the steel that is used.

The main and connection materials of the steel structure shall be protected against adverse weather conditions and stored in a humid-free environment. The welding electrodes should be stored in unopened boxes and dampness loss or gain should be prevented.

Before the beginning of the work, the Contractor is obliged to get the approval of the Engineer on:

- Materials,
- Manufacturing and installation technology and equipment,
- Technical staff and qualified workers.

4.9.1. Manufacturing

Preparation of material

Before the beginning of the manufacturing:

All plates are passed through levelling rollers at least twice,

Rolled shapes shall be corrected using methods that do not damage the material properties.

High quality or heat-treated steels shall be corrected by cold treatment as a principle. Other types of steels shall be straightened at 650° C by hot processing and cooled by air.

These straightening shall provide to keep the deviations after the manufacturing under the limits of:

- L/2000 and 3 mm in column and precision components,
- L/1000 and 5 mm in the beam and other components

Cutting, bending, drilling

In flame cutting, the cutting loss shall be taken into consideration and the attention shall be paid to ensure that the parts are in the dimensions shown in their drawings after cutting. The cut edges shall be levelled and straightened to provide the requested dimensions. Corners and edges that are straightened more shall be filled.

Cold bending of the parts shall be made on the pressed roller. In hot bending applications, the entire piece shall be heated. Drilling and welding works on parts to be bent shall be realized after bending.

Drilling operations shall be carried out later with methods and equipment that will not require correction. Materials thicker than 10 mm shall be drilled first, then expanded with rymer and matched to the project dimensions. Joining process shall not be realized until the burr and unobstructed deformations around the hole are corrected.

4.9.2. Joints

In the steel structure, the joints excluding the points specially specified in their drawings and site joints shall be welded. At a junction, the welding and bolt shall not be used together for load transfer purposes.

Bolted joints

In bolted joints, at least 2 M16 bolts shall be used in the main carriers and at least 2 M12 bolts shall be used in the secondary components.

The bolt holes shall be drilled 1 mm larger than the bolt diameter and the bolt length shall be chosen so that at least three threads are exposed after the nut is tightened.

In the bolted joints, attention shall be paid to keep the error and derivations under the level of:

in the distances between the holes	±2 mm
The equation of separate part holes	± 1 mm
The gap between the surfaces in the high-strength bolts	1 mm

Welded joints

All welding shall be realized with electric arc and jacketed electrodes. Welding shall be carried out correctly and carefully by qualified personnel to reduce tensioning and distortion that may occur due to welding as much as possible. The welding dimensions shall be exactly as shown in their drawings.

Welding works shall be carried out in accordance with Turkish or EU standards.

Welding material and equipment

Electrodes to be used in welding shall be selected in accordance with the features of the steel. The diameter of the electrodes to be used in stress transmission weldings shall generally be 4 mm to 6 mm. Electrodes whose liner is peeled and moisted enough to decrease its workability and strength shall not be used.

Welding machines shall be of sufficient capacity and have the power to create a continuous arc with appropriate electric current. The machines shall be equipped with counters to control the electrical current

to be used and operated within the recommended voltage and amperage limits for all types and sizes of electrodes.

The jointing clamps shall be selected so that they keep the parts in their original positions without overtightening.

Worker quality

The welders to be used shall have a welder license and have at least one year experience. The welders should also have at least three months of welding experience at the workshop where the work will be carried out.

The work of the welders is subject to the approval of the Engineer. Following tests for the welders may be applied:

- Tensioning,
- Bending and folding,
- Indentation.

Welding area

Workshop welding shall generally be realized in the places where temperature and humidity conditions are controlled.

Welding process shall not be initiated under damp, harsh winds and bad weather conditions that may affect the welding quality. If the temperature of the working area is below -15 °C, welding shall not be realized. If the temperature is between 0 °C and -15 °C, pre-heating shall be applied. For this, at least 10 cm wide strip of the surface to be welded should be heated above 50 °C.

Welding

Steel surfaces shall be cleaned from materials such as water, rust, dirt, oil and paint before welding.

The welding shall be realized in a horizontal position usually by using appropriate clamps.

Welding machines shall be kept under a sufficient and stable voltage so as not to be affected by energy fluctuation and the machines shall be adjusted to work at full efficiency.

In case the plate thickness is over 25 mm, pre-heating shall be applied above 50 °C to at least 10 cm part near the welding scam.

Every slag shall be carefully removed before starting the next scam.

The section to be welded at the construction site and the area around 20 cm wide shall not be painted. If there is a possibility of rust, these parts shall be taken under protection with an appropriate drained oil.

In butt weldings, the bend or grooves shall be opened in the shape and size shown in the specifications. In significant butt-welding joints, the extension bars or plates having the similar welding Groove shall be welded to the head and end. Following the welding, the extensions shall be cut and the ends shall be straightened.

In fillet weldings, the parts shall contact each other tightly, the largest spacing between them shall be less than 1 mm. The fillet welding ending in the corner of a component shall also be maintained around the corner continuously.

Welding control

All weldings shall be controlled visually from cracks, deficiencies, reinforcements. This check shall also be applied to at least the first scam in multi-scam weldings.

Important welding joints shall also be controlled by radiographic, ultrasonic and dye penetration methods. The Contractor shall have radiographic control equipment and qualified staff at both the workshop and the construction site. Radiographic control shall be applied in 20% of the length of the welding in the part to be specified by the Engineer and at important butt-welding combinations.

The weldings that will provide water impermeability shall be checked with the "vacuum box" method. The Contractor shall present the mode of application to the Engineer.

Defective welding

The weldings that are detected as a result of eye control or other controls shall be corrected or removed and reallocated in accordance with the instructions of the Engineer.

In the welding, welding flash deeper than 0.75 mm, notch or gap shall be filled with welding. Electrodes smaller than 4 mm in diameter shall be used for gap filling and defective welding correction.

In case of cracks in the welding, it shall be removed and reallocated. If the crack is determined to be limited, the correction shall be made after removing the weld scam up to 50 mm from the crack ends.

In the areas where welding reinforcement is required, the reinforcement thickness shall not exceed 15% of the welding thickness. If this is not enough, the welding shall be removed and reallocated.

All repairs shall not be considered as completed unless they are re-checked and approved by the Engineer.

4.9.3. Protection against corrosion

Protection of steel structures against corrosion shall be provided by coating by painting or galvanizing.

The surfaces before coating shall be thoroughly cleaned from all kinds of oil, dirt, rust, chemicals and foreign materials that make the coating difficult for adhesion. Cleaning shall be realized by sandblasting by using a metal brush or scraper. Emulsive detergent should be used for cleaning the oil and grease. Coating shall not be realized without the approval by the Engineer.

Painting works

All kinds of information, reports, laboratory test results and material samples showing the compatibility of the paints and paint materials to be used with the work and specifications shall be submitted to the approval of the Engineer. Other types of paint shall not be used.

Regarding to the paint, the suggestions and warnings of the manufacturer shall be followed on:

- Storage, protection,

- Additives such as thinner, thickener, dryer, powder paint,
- Mixing
- Application tools and methods of the paint

Paint application

All paint works shall be realized with a careful workmanship by preventing leakage, sagging and accumulation.

Unless otherwise specified in the drawings and the reports of the manufacturer, the paint shall be applied in 4 coats as 2 coats of primer and 2 coats of paint. The top coat of the paint shall be realized at the construction site after the installation.

The minimum thickness of each paint coat shall be 40 microns. However, considering the location of the surface to be painted, the weather and contact conditions to be affected, the paint features, the thicknesses of the paint coat shall be determined by the Engineer in line with the specifications and the recommendations of the manufacturer.

The next coat shall not be applied until each coat dries and there shall be a minimum of 24 hours between successive coats. All shades and colours shall be determined according to the approval of the Engineer. At the end of the drying period, the thickness of the coat and the coats shall be measured by the Engineer with a "microtest" device. Paint works of the missing thickness or failing to meet the required conditions shall be completely scarified, cleaned and re-made in accordance with the instructions of the Engineer.

Painting environment

Paint works shall not be realized under rain, snow or strong wind. Also, it shall not be applied under the following situations:

- Air temperature is below 5 °C,
- The weather is foggy, misty,
- Waiting for rain before the paint coat dries,
- The surface is moist or frozen,
- The surface is hot enough to swell the paint,
- In cases where there is more than 35 °C difference between the surface temperature and the dew point temperature of the air.

Painting in the construction Site

Unless otherwise specified, all steel parts shall be painted as one coat at the construction site after the installation work is completed.

Before this top coat paint is applied, the following processes shall be realized:

Bolt heads and around are thoroughly cleaned and painted,

Repairing the paints damaged during transportation or installation in accordance with the painting conditions,

Topcoat paint shall be realized after the repair works approved by the Engineer.

Galvanization works

Galvanization of metal works shall be carried out in accordance with the standards shown in the design drawings.

Zinc shall be coated by hot dipping, with a coating of 600 g/m2 or at least 80 μ on any type of iron and steel manufacturing surface described as galvanized in the drawings. Galvanization work shall be realized with zinc bloom containing 28% zinc.

The galvanization shall be applied after the processes such as drilling, cutting, bending, rasping is completed and the surfaces are entirely cleaned.

Coating thicknesses shall be checked by the Engineer with "elco-meter" or "microtest" dry diaphragm thickness gauges.

If the galvanized coating fails, the damaged parts shall be blasted and cleaned and these parts shall be repaired by spraying with zinc.

Cleaning

After the completion of the works, the walls, floors, bright parts, panels, etc., which are contaminated with all paint, shall be cleaned by the Contractor.

Installation

The Contractor shall not send the manufactured steel elements to the construction site without checking their compatibility for their designs. The control shall be carried out by realizing pre-installation as much as possible.

The Contractor shall prepare an installation plan for the installation works in the construction site showing the following points:

- Qualified installation staff,
- Crane and other lifting equipment,
- Tensioning, supporting, suspension and scaffolding systems,
- Installation method and necessary security measures

Adjustable torque wrenches shall be used to tighten the bolts. Compression shall be realized by starting from the middle of the bolt group and going towards the edges. All bolts shall be tightened up to 80% of the required and then brought to the desired compression. 10% of the bolts in each group shall be controlled with torsion wrenches.

In case of the components do not fit together during the installation, it shall not be allowed to reseat and fasten in place by excessive pulling or bending. After the last adjustments, the bolted components should be easily removable.

After the installation of the steel structures, the measurements shall be made with precision tools and the deviations to be determined shall not be more than the following values.

- E: eccentricity
- H: height
- L: length

- Building slope (e/H): 1/500 and e ≤ 25 mm
- Building distortion (e/L): 1/2000 and e ≤ 3 mm
- Level of column placement: e ≤ 3 mm
- Deviation of the centre of the anchorage bolts: e ≤ 2 mm
- Eccentricity of the column centres: e ≤ 5 mm
- Storey height: e ≤ 3 mm
- Column slope (e/H): 1/2000
- Horizontal slope of the beam (e/L): 1/1000 and e ≤ 3 mm
- Beam bending (e/L): 1/1000

4.10. Pipes

4.10.1. General

4.10.2. Method notification regarding pipe laying

Storage, transport, laying, jointing of pipes together with the methods for backfill material around the pipes and pipe ditches and their compression is subject to the approval of Engineer.

At the beginning of the contract, the Contractor shall present a detailed method about application of pipe laying on worksite.

Method notification shall include the following:

a) All types of storage areas, places of porches, their sizes and security precautions,

b) Methods for transport of pipes and their joining materials from the manufacturing place or import point to storage area, their loading and unloading,

c) The transport of pipes from the storage area to pipeline routes and methods for their loading and unloading,

d) Method for excavation of pipe ditches, machines to be used and method for discharging water,

e) Materials to be used for Pipe bedding and support, backfilling in pipe ditches, machines to be used and methods of compression,

f) Details, controls and hydraulic tests regarding the order of works proposed.

The suggestions of the manufacturer for pipe laying, jointing, bedding and backfilling shall be respected.

Material supply

All materials shall be supplied from only approved manufacturers. Contractor shall present together with its offer a list of companies from which the materials shall be supplied.

Before order for any material and upon request, the Contractor shall present the following information:

- Type, dimensions, thickness, weight, class, tolerance methods and related details of the material to be used,
- Details about standards according to which the material was manufactured, special equipment, adapters and jointing methods,
- Methods for coating and lining.

Utility water certificate

It shall be certified that the water distribution pipes and the materials of pipe and coating does not contain any substance hazardous for health for the domestic water pipelines.

Equipment and adaptors

Unless otherwise is specified, pipe jointing equipment shall be in the option of the supplier and be compatible with the existing pipe system. Contractor, shall provide adaptors to be used for jointing the existing pipes, even if they are made up of any other material.

Toxic materials

It is forbidden for the Contractor to use any kinds grout, material or auxiliary materials containing any kinds of substances toxic or deleterious to health in pipe system, their accessories, linings, impermeability…etc. or use them in concrete, soil and similar material or to bring them to worksite.

4.10.3. Pipe materials

General

Pipe materials shall be the best quality of the most appropriate material for usage under the foreseen working conditions. They shall be able to stand traffic and operation loads, abrasion and corrosion, temperature changes, climate conditions and unexpected strains in any points of work without any deformation, deterioration and any effect on the performances and endurance of the parts within the system.

Unless otherwise specified, all pipes shall be resistant against heavy traffic load and the water pipes shall be resistant to at least 16 bars of nominal pressure.

The Contractor shall supply durable material appropriate for its usage if corrosion or abrasion is expected as a result of contact with sediments or any other reasons. Before maintenance period is over, the materials showing indications of corrosion, deformation or abrasion shall be replaced by the material approved by the Engineer.

Concrete pipes

Contractor shall supply cylindrical concrete pipes which are compatible with DIN 4032 (concrete pipes) standard and designed compatible with heavy traffic load and the jointing ends and necessary equipment of which are high quality or pipes that are compatible with DIN 4035 (ferro concrete pipes).

Concrete pipes shall be made of concrete resistant to sulphate and their interior and exterior surfaces shall be smooth and refined from honeycombed pattern. Either newly poured or indurated, the surface of the pipes shall not be brushed, coated or smoothed with using water, cement paste, mortar or any other material. There shall be no signs of cracks or signs of holes that can deepen in the pipes. Pipes that do not meet these requirements shall be refused and removed from the worksite.

Pipes with a diameter of 300 mm or lower can be unreinforced provided that they are compatible with the conditions of extra strong pipe types. Pipes with a diameter of 400 mm or higher must be compatible with DIN 4036 standard. In case that the pipes are manufactured compatible with other standards, reinforcement shall be applied as one layer in the centre for two directions regarding the pipes with diameters of 400 mm and 500 mm and reinforcement shall be applied as two layers for two directions regarding the pipes with a diameter of 600 mm or higher.

Concrete pipes shall not be transferred from the factory before 28 days pass after manufacturing.

Steel pipes and their equipment

Steel pipes shall be used in small quantity and on the condition that there is no alternative. In this situation, for fillet welded jointings, bushed, seamless steel pipes with outer coating and inner sider of which are cement mortar lined shall be supplied.

All steel pipes and their equipment shall conform to DIN 2401, DIN 2402, DIN 2458, DIN 2461, DIN 1612, DIN 1629 or other equivalent international standards.

Hi-density Polyethylene (HDPE) pipes and equipment

HDPE Pipes, regarding DIN 19533 or equivalent standards shall conform to DIN 8074, DIN 8075 or ISO/161 standards. Pipes shall be designed as appropriate for Type PN nominal working pressure and they shall have propulsion of 50 kg/cm2 in 20oC and pumping shall be jointed with couplers.

Nominal and outer diameters of HDPE pipes are as follows:

Nominal Diameter	Outer Diameter	Thickness of the wall
DN	mm (inch)	mm
20	25 (3/4“)	3,5
25	32 (1“)	4,5
50	63 (2“)	8,7

Helical pipes shall generally have a length of 100 m and minimum diameter of their rollers shall have an adequacy for avoiding pipes' twisting. Minimum inner diameters of the pipes shall not be less than 24 times of outer diameter. Edges of the pipes shall be wadded and closed.

Pipes shall be made of high-density polyethylene which must include antioxidants, UV stabilizers and pigments need to be used in manufacturing seamless potable water pipes. Contractor shall provide a third-party certificate that is approving the manufacture including these substances.

Mechanical couplers and equipment shall be used and mechanical couplings shall be press-pass type and made with acetyl homopolymer or combined with bronze adaptors. Coupling points must provide durability and impermeability to the system in case of strain. Press-pass type coupling consists of a PVC clutch ring and nitrite elastomer or equivalent 0 ring.

Couplings and equipment shall be designed in line with 16 bars nominal working pressure and 40oC temperature and it shall be possible to use with HDPE pipes within this Contract.

PVC Polyvinyl Chloride (PVC) pipes

The PVC pipes and their equipment must comply with the standards DIN 2401, DIN 2402, DIN 8063, DIN 16450, DIN 16451, DIN 16929 and DIN 19532.

Galvanized Iron (GI) pipes

Galvanized iron pipes must comply with DIN 2441, ISO 65 or BS 1387 heavy series or DIN 2441 by being equipped with threaded socket.

The wall thickness of GI pipes shall be as follows:

Nominal Diameter DN	Thread Size (inch)	Wall Thickness mm
20	3/4“	3,2
25	1“	4,0
50	2“	4,5

Pipes shall be provided as screwed to pipe threads in accordance with DIN 299. Threads of the screws shall be clean, smoothly cut, appropriate for the pipe axis and shall not have excessive burr. Every pipe shall be equipped with socket at a tip and the tip without socket shall be equipped with a protection segment. Tip of every socket shall be bevelled within inside.

Galvanization shall be hot dip galvanizing in line with DIN 1706 and conform to DIN 50925 copper sulphate test method.

All types of pipes shall be smooth, well-glazed and be cleaned of cracks, flaking and other faults on surface and shall have an acceptable smooth surface. Total length of a pipe equipped with a socket at one tip shall be 6 m ± 150 mm.

Glass fiber reinforced plastic pipes (GRP)

GRP pipes shall conform with DIN 16869 (Materials) and DIN 19565 (Laying pipes) or similar standards.

4.10.4. Tests of materials

Test In factory

Supplier shall test, in the manufacturer's working place, all types of pipes, their equipment and equipment of pipeline including all necessary coupling material. The Contractor, under applicable conditions, shall test the material supplied by itself in the same way. The Contractor shall present the certificate, issued by the manufacturer, certifying that all types of materials were tested in the factory and passed successfully the tests foreseen in the related standard specifications.

Any or all types of material or manufactured material shall be tested beforehand in accordance with the relevant tests or approved standards upon the request of the Engineer. Work items to be provided shall be best sample of its type in respect to material and workmanship and shall be subject to the approval of the Engineer.

Storage at worksite and tests

Materials supplied by the Contractor must be stored in an appropriate storage area approved by the Engineer. Contractor shall construct a fenced and lockable facility where the pipes, equipment, valves and other related material shall be delivered and shall protect the materials from external factors by building porches with enough size and capacity. Besides, contractor shall be responsible for cleaning, arrangement, fencing and all kinds of security of storage area. Contractor, shall make the tests that it deems necessary in respect to the appropriateness of them to the contract.

The Contractor shall inform the Engineer that all facilities have been delivered clean and in good condition, the identification marks are readable and the materials are piled and stored as approved. The Contractor shall keep a detailed record about all kinds of pipes, equipment, valves and other materials approved by the Engineer and shall indicate the quantities of all types and classes of materials:

- Accepted by the Contractor during works,
- Declared to be faulty, damaged or deficient during acceptance,
- Broken, damaged or lost during works,
- Withheld by the Contractor following that they were understood to be surplus.

These records shall be updated every month and be presented to the Engineer by the Contractor. The Contractor shall act in accordance with the orders of the Engineer about removal repair or replacement of pipes, equipment or valves deemed to be faulty, damaged or deficient.

4.10.5. Transport and storage of pipes

Transport of pipes

Contractor's arrangements about winching, transport and transfer shall ensure all materials' transport to worksite without any damage and in good condition.

Pipes and their equipment shall be transported delicately and the Contractor shall keep ready the cranes and other equipment in the places where the pipes and their special equipment have to be raised or unloaded.

For the transport of coated and lined pipes, sailcloth hangers, rubber belts or special equipment which are shaped in accordance with their tips. Pipes shall not be raised or lowered or drifted through using cranes.

Drawn iron pipes shall be supported with wood supports, sandbags or valve seats. They shall be kept away from placing on their sockets and contact with adjacent pipes.

The height of the load according to the diameters of the pipes shall not exceed the height suggested by the manufacturer and approved by the Engineer. Ropes and similar fixtures shall be applied in a way to avoid pipes jostling each other and appropriate bolstering shall be utilized to avoid disturbances of the exterior coating of the pipes caused by jostling of the ropes. Pipe special equipment shall be supported with sandbags and similar bolstering material and fixed as described above and be protected from damage.

Pipe piling

Pipes shall be piled in an appropriate way in the worksite and the piles shall form a regular construction body. Borders of every pile shall be clearly marked and access of cranes and vehicles to the gaps between

the piles shall be avoided. The process for controls or picking up of the pipes or placing new pipes to the piles shall be facilitated. The necessary areas for piling of the pipes that shall be delivered along the pipeline route shall be arranged by the Contractor in a way to get a solid and smooth surface. In this area there shall be no loose stones or waste materials that can give damage to the exterior coating of the pipes.

Distribution in the site

During the distribution of the materials in the site, materials shall be unloaded to the adjacent or close points to the places where they shall be used. The rubber rings to be used for pipe jointing shall be stored and protected in a way to avoid deterioration.

Contractor shall keep the pipes and their equipment clean during works. The dirt, rubble or similar foreign substances in the pipes or joints shall be cleaned before installation.

Controls before installation

While they are hanged over the ditch before they are placed their final positions, all pipes and their equipment shall be controlled to determine whether any cracks or other defects exist.

Damaged or faulty materials shall be refused and be removed out of the worksite. Bushed ends or the ends with sockets shall be controlled with special care. Damages that may appear in outer coatings must be repaired before the pipe is placed in the ditch. Pipes with damages in the inner protective coating or with damaged linings shall be put aside and refused. At this stage any defect material shall be deemed to be caused by neglect of the Contractor during their transfer and upon the decision of the Engineer they shall be replaced with new ones or repaired.

Placing in the ditch

Pipes shall be placed in the ditches by using equipment designed and approved to protect the pipe and outer coating against damages. No contact of bare cables, chains, hooks or metal rods with neither outer nor inner lining shall be allowed. An information about possible damages that may occur during placing in the ditches shall be immediately provided to the Engineer. Decision about repair or refusal of the damaged pipe, equipment or accessories shall be taken.

The Contractor shall repair or replace the material that is damaged during placing in the ditch. Coating material shall always be kept ready for use in the worksite during pipe laying.

4.10.6. Pipe laying

Determination of pipelines routes

The Engineer shall keep the right to change or cancel part(s) of the routes shown on in the drawings and the Contractor is responsible to place the pipes according to the change order.

The Contractor shall realize an inspection at the worksite before the application of pipeline with the participation of the Engineer.

General conditions about pipe laying

Pipelines shall be placed in the excavated ditches as described in the Specifications of Earthworks and be closed with backfilling with minimum thickness and width. Pipes, curves, ells and other special parts shall be placed in the routes in a way that the top sides of the pipes shall be located in the minimum depth defined

under the ground level that is along the route and is graded. Completed pipeline shall extend firmly between the ells and curves. A uniform grade between the grade changes shown in the design drawings shall carefully be kept.

It shall be ensured that the pipes shall be laid firmly with their full length that shall form a uniform bearing surface by grading the bases of the ditches and manholes shall also be formed.

Granule material of the pipelines' bedding shall consist of gravel or broken stones and they shall form an appropriate filling.

The grain size for pipes with inner diameter up to 1200 mm shall be between 20 mm and 5 mm and it shall be possible for all these grains pass through the 20 mm-sifter and maximum 20% of it shall be able to pass through 5 mm-BS sifter.

Pipes, through approved method and aligned correctly, shall be positioned in the ditch and be bedded. Before positioning, every pipe shall be examined with care, inner parts of them shall be cleaned of all foreign materials. The pipes shall also be checked about whether they are faulty or not. Through professional application, the Contractor shall place the pipes, their equipment, special parts and adaptors within the framework of duly realization of Works and shall actualize jointings and their connections in accordance with the specifications.

Contractor shall repair the possible damages that may occur on protection coating during pipeline works.

At the end of every working day, entrance of foreign materials into the pipes shall be avoided by placing a firm wooden stopper or iron disk in the open end of the pipes.

Laying of concrete pipes

Contractor shall ensure the conformity of the conditions and acceptances used in static calculations to real ground conditions, exaction methods, sections of ditches, compressing, material, ground cover…etc. and shall certify this.

Every pipe shall be cleaned with care and their firmness shall be checked. Pipes with damages or observable inconveniences and these shall be replaced with new ones.

The shapes of the places excavated for the pipelines shall be smooth and there shall be no stones or any other asperities. Pipes shall be placed into dry points. In case that the excavation ditches are lower than water table, the Contractor shall construct a dewatering system after obtaining the approval of Engineer. Dewatering shall continue until all the works under the level of water table are completed or the time to be defined.

All the pipes shall be laid in their exact alignment and grade and in this way, it shall be ensured that the pipes are on an exact vertical and horizontal straight line unless otherwise specified. Contractor shall transfer the pipes via preferably a hand-operated mechanical equipment.

Contractor, shall provide and place guard stakes coloured in an appropriate way and laths prepared in accordance with pre-calculated measurements with intervals not more than 10 m in the places where the pipelines shall be constructed in ditches. In this way the pipes shall be aligned in a linage and their directions shall be corrected. The laths shall have a horizontal shoe to ensure their settlement on their bottom tips. Guard stakes shall be placed vertically over the pipeline or even almost adjacent and the number of guard stakes on the pipeline constructed with a certain grade shall never be less than three.

Contractor shall keep the interior parts of the pipes clean and ensure that water, dirt, stone or foreign materials shall not get into the pipes as the installation continues. Moreover, after daily works are completed or during the periods when no installation continues, open ends of the pipes shall be closed with appropriate stoppers. Contractor shall take the necessary precautions for the pipes not float.

Marker band shall be set 300 mm above the pipes, cables, ducts and similar fittings where they are buried in the soil.

Laying steel pipes

Special conditions for jointing and transferring steel pipes are as follows:

1) Black (seamless) steel pipes shall be jointed with electrical-fused butt-welding. Welding shall be executed in accordance with approved standards. The electrodes to be used shall be appropriate for arc welding.
2) The welders assigned by the Contractor shall have passed the welding tests approved by the Engineer. No welders shall be assigned without passing necessary tests and obtaining written approval.
3) After compression test foreseen, jointing points of black steel pipes shall be coated with bitumen and be wrapped.

Laying HDPE pipes

Installation

For successful installation of HDPE pipes, it is necessary to provide a solid and continuous support of the supporting earth to the pipe. HDPE bedding and backfilling of ditches shall be carried out within the scope of Earthworks Terms and Conditions. The cutting action to be applied to the pipe shall be perpendicular to the plunger axis and to provide a clean cut. Sandpaper shall be used to remove material burrs and create a smooth cutting surface. Only in the manner; acetal-homo-polymer based, PVC grip ring and nitrile elastomer 0-segment, ultra violet ray resistant body connectors, reduction connectors, 90-degree elbows or T-pieces type of push-through fitting equipment must be used. Some metric pipes require lining. Extractor tools shall be used to remove the equipment from the pipes. Some push-fit hardware is provided with screw end caps.

Warning tape

For easy identification of the pipeline, an anchor warning strip shall be placed 300 mm above the service pipe. The general width of the blue band shall be 200 mm and be equipped with an aluminium strip along its length, along the top of the pipe will have the warning sign "Dikkat aşağıda Su Borusu var* ".

Adjustment to be made in field

The pipe and joining method must allow the pipe lengths and equipment to be adjusted according to the site conditions and the changes to be made on the route.

* *"Attention. Water Pipe Below"*

Installation of galvanized iron (GI) Pipes

It includes complete installation of GI pipes, their equipment, joint fittings, pipe supports, excavation and filling works, repairs and execution of pressure tests.

Signs

Signs for pipelines, valves and fire plugs shall be prefabricated concrete and their size shall be: with bevelled corners 30/40/10 cm, signs shall be placed in a concrete bed with sizes of 50/50/50 and in this way, sign shall form a 90 cm-ledge. Letters and numbers shall form a cove of approximately 8-10 mm on the surface and shall contain this information:

For pipelines: line reference, diameter, length of route; for valves: valve number and time for opening / closing;

For fire plugs: plug number and time for opening / closing.

4.10.7. Cutting pipes

Concrete pipes

Pipes shall be cut with mechanical cutting machines in a way that the pieces cut shall conform to the conditions of the whole. No processes of tamping or cutting of shall be permitted.

Steel pipes

It shall be avoided as much as possible to cut the steel pipe on the field. If this is not possible, appropriate cutting machine that can actualize perpendicular cut to the axis of the pipe and be attentive not to give any damage to coating or lining of the pipe.

Polyvinyl Chloride (PVC) pipes and HDPE pipes

Cutting process for these kinds of pipes shall be kept at minimum level. In case that they must be cut, a clean and perpendicular cut to the axis of the pipe must be realized and the suggestions of the manufacturer must be taking into account. The ends that are cut shall be tapered and the bevelled conical tip shall be full similar to the bushed tip that was manufactured in the factory.

Resolver weldings, which are only permitted to be used for infrastructure connections, shall be done by fully complying with the suggestions of the manufacturer and only by using the solvents provided by the manufacturer. In addition, underground pipeline must be placed with a deviation of a maximum of 30 cm in every 30 meters of the pipes laid. It shall be also be taken into account that both ends of the pipe being jointed must be at same temperature.

4.10.8. Testing and sterilization of pipelines

Pressure test

Pipeline of transmission and distribution systems shall be tested with a pressure 1.5 times more of the operating pressure.

Pipelines shall be tested with water before pipeline connections are done and manholes are closed. Testing shall be applied to the sections of the pipes.

The length of the sections to be tested and the test method shall be approved by the Engineer. After the pipeline is fully filled with water, the pressure is increased to testing pressure with pumps upon the order of the Engineer. The pipeline is kept under this pressure for 24 hours and during this time the pressure must not get 75 % lower of the testing pressure.

For the last test, full value of the testing pressure shall be reached and this value shall be preserved for at least 2 hours for the final test. If the pressure loss shall not exceed 2,5 % of the testing pressure, the test shall be deemed successful. On the condition that the test fails, Contractor shall immediately find the faults and correct them and the testing shall continue until successful results are obtained.

Contractor shall provide all kinds of clean water, gauges, pressure indicators and other equipment necessary for testing.

Sterilazation

Water distribution lines are purified by spraying clean water after tested hydraulically and before putting it into operation. After this process, they shall be sterilized with a chloral solution that shall include 30 mg/l in application point. Air shall be blown in air blast points until 5 mg/l chlorine residue is obtained.

When the 5 mg/l chlorine residue is obtained, air blowing shall be stopped and water shall be preserved in the pipe for at least 24 hours. After this period, water shall be tested in air blast point in respect to chlorine balance. If no chlorine residue remains, it shall be repeated until positive results are gained. After the sterilization process is completed, water distribution line shall be washed with 0.5 mg/l chlorine water in air blast point until exit water concentration is lower than 0.5 mg/l.

Repairs and removal of faults

The repairs or removals of faults observed during the tests upon the orders of Engineer shall include the repair of two pipes in an appropriate way or replacing the faulty pipes.

4.10.9. Storm drains, source facility, siphons, drainage ditches and manholes

Definition

This part gives definitions about construction of concrete or masonry storm drains, caps of source facilities and drainage ditches in accordance with their places and similar other constructions under the conditions below in dimensions and types shown in the drawings.

Materials

Concrete

All cement and other materials necessary during the construction of concrete shall conform to the conditions within the section of "Forming Concrete" or the conditions placed within the special specifications.

Endurance class of the concrete shall be in line with the ones defined in the drawings or special specifications on the condition that not lower than C20.

Reinforcement bar

Ferro concrete shall be in line with the conditions within "Reinforcement Bars" to be used for ferro concrete plaques or the conditions placed within special specification.

Materials for masonry

The conditions within this section or the ones within the special specification shall be respected. Harem type to be used and its dosage shall be given in the drawings or special specification.

Cast Iron

Covers, plaques, grids and drainage ditches shall be the best quality without any casting defects and beads and showing no cracks or other faults and be in firm and homogenous condition. These must be casted in exact dimensions, be firm and covered with pit coal tar. The covers of storm drains must exactly slot in their places. For this every cover of the storm drains shall be given numbers before their transfer and every part shall be used for its own place and any errors shall be avoided in this way. In case that it is deemed appropriate, the excesses shall be flattened with a machine in order to ensure appropriateness.

Ferroconcrete plaque covers

Type of ferro concrete covers, amount of iron and its condition and dose of concrete shall be indicated in the drawings. These shall be smooth and good-looking and slot exactly in their places and it shall be possible to open and close these easily. Iron handles shall be painted with pit coal tar.

Construction methods

All constructions included shall be executed in line with dimensions, levels and types defined within drawings and special specifications. Excavation shall be carried out with necessary depth and width for the construction and shall be compressed with amount and manner to form a smooth and homogenous base surface. Placing appropriate base material into the base when inappropriate material is found shall be included in excavation works. In case that the storm drains, drainage ditches and culverts are constructed with concrete, the ones in the special specification shall be respected. In case that they are constructed as masonry, the conditions in that section or the ones in the special specifications shall be respected. In addition to these, the grout within shall be made well-apparent and the outside of the walls shall be well-plastered.

In the siphons, source and estuary facilities, pipe culverts shall be shall be in the same dimensions and type and they shall be in line with the conditions of their material. They shall be constructed, before masonry walls are constructed, with the grade and directions indicated in the designs and shall be embedded within the masonry.

It is necessary that the parts of pipe culverts within the wall shall be adapted without any gaps or shall be extended in a way that connection shall be ensured with other pipe culverts outside the wall. Cast iron covers shall be slotted into the water beddings within the special specification.

After the completion of the works and the necessary time passes for gaining endurance, all reinforcements, templates, protection top layers shall be removed and the excavated places shall be filled with the materials approved by the Engineer and then be tamped.

Manholes

Manholes shall be constructed as and with the intervals shown in the drawings. They may be constructed with in-situ cast concrete bricks or by jointing prefabricated elements. The bases of these manholes shall have the dimensions and quality indicated in the drawings.

There must be iron steps in the manholes depth of which exceeds 90 cm in order to carry out the necessary control and maintenance works can be carried out.

Following the completion of subsurface drainage, a pipe without manhole shall be used as from the last manhole set up in order to evacuate water collected.

4.11. Reinforced earth walls

Construction of reinforced earth walls in the application drawings shall be executed in accordance with *Highways Technical Specification 2013* and the indications given below.

4.11.1. Components of reinforced earth

Includes panels, hi-adherence galvanized steel strips, connections and accessories.

4.11.2. Prefabricated concrete components

Materials and features of concrete shall be as follows:

- Cement PÇ42,5 MPA (TS 19-1993/01)
- Water (mixed and contact) in line with TS3440;1247 and 500'
- All aggregates (Sand and gravel) in line with CSA A23,2-25a in respect to alkali aggregates,
- Maximum aggregate grain size <20mm(in line with TS706; TS802)
- Plasticizer and air entrainer additives in line with ASTM C260-C 494 and TS 3452-1984/02 together with TS 3456-1984/02
- Maximum water absorption (%): in sand (max) 3.0, in gravel (max.) 1.0 are recommended
- air percent in fresh concrete: <%air<7 (when tested in accordance with ASTM C173 or ASTM C 231 or TS 2901-1977/12),
- fresh concrete consistency with slump cone in accordance with TS 2871-77 Slump<80mm
- Features of 28-day hardened concrete (under normal cure conditions TS3068-73/03) pressure endurance in case a=15 cubic cm: fcmin > 34 Mpa conditions shall be ensured,
- the frost loss of a 28-day normal cure hardened concrete, which is exposed to 25 times freezing and thawing by using Supersaturated NaCl solvent in line with frost endurance: ASTM C 666-84 and TS 699-84, must ensure <3%.
- The concrete dosage to be used in construction shall be determined with prestudies of percentages for plasticizers and air entrainer additives and laboratory pressure endurance shall be fcm>27 mpa (in cylindrical sample)
- Amount of cement shall be minimum 350 kg7m^3

Panels shall be casted into the steel moulds placed horizontally on the surface. The exposed face of the panel shall be at the bottom. Concrete shall be compressed with a vibrator to let the concrete get into every point and obtain an intense panel and avoid bubbles, honeycomb appearance and gaps. Quilt shall be applied

to concrete casted moulds for cure. After casting, cubic samples shall be taken and when they reach 70% of 7-day pressure endurance after panels are taken out of the moulds, panel installation shall begin.

Connecting clamps to be kept within the panel shall be hot dip 500 gr/m2 (70 zinc coated carbon steel.

All panels shall be processed in a way to avoid cracks, breakings and bendings. Panels shall be stored as not higher than 5 panels.

Rubber wedges (EPDM) shall be placed in between prefabricated concrete panels and in this way, they shall adapt wall deformations. In horizontal and vertical joints, 30 mm backing rods shall be placed.

4.11.3. Steel stripes

Galvanized anchorage tapes of the sizes specified in the project shall have high adherence, medium tensile strength and tensile strength of at least 510 N / mm2. The steel strips shall be coated with hot dip galvanized to a minimum of 530 gr / m2. It shall be screwed to the wall panels with the built-in steel connection clamps. 10.9 grade bolts and 8 grade nuts shall be used.

Fasteners, anchoring rings and lifting hooks shall be hot dip galvanized.

4.11.4. Selected back filling

The granular earthenware filler with shear strength reinforced with galvanized steel strips to be placed behind the wall panels must have the following characteristics and conditions.

Reinforced Earth Filling Material Chemical Properties

CL 200 mg / kg (in dry medium), 100 mg / kg (in water)

S04 1000 mg / kg (in dry medium), 200 mg / kg (in water)

Resistivity> 1000 Ohm.cm (in dry environment),

3000 Ohm.cm (in water) 5 <pH <10

Grading of Reinforced Earth Filling Material

Sieve Analysis	% Passing
125 mm	100
75 mm	85-100
12,5 mm	25-100
2 mm	15-100
0,59 mm	10-65
0.075 mm	<15

The material which is made from soil and soil excavation made for earth filling shall be used with 50% mixing as stabilize filling material. In this filling material, there shall be no material that is not friction-resistant or water-sensitive. The uniformity coefficient of the earth filling material must be Cu> 5, and the plasticity index should be Pl <6. (C = D60 / D10> 5)

4.11.5. Reinforced soil construction

It shall be levelled and compressed with a roller as shown on the base of the building. Inappropriate land shall be disposed and replaced.

In order to start the installation of reinforced earth concrete panels, the pressure resistance shall be 20 Mpa to form a flat surface on which concrete poured in 15x35 cm dimensions and a grounding concrete panel can be mounted.

Prefabricated panels shall be installed in a way to give a smooth surface and appearance, and the Contractor shall ensure the construction wall in line with the project and the right level.

The laying and compacting of the fillings shall be carried out after placing a row of panels, the first layer being flattened and compressed before the second layer is placed. The thickness of each layer shall not be more than 40 cm. The filling material shall be sealed and clamped parallel to the panel surface. The selected granule filler shall be compressed to 92% maximum density according to the AASHTO T180 or ASTH D 15557 (Mod Procter) test. Compression control of this material must be carried out using the methods described in ASTM D 2049.

For drainage, the PVC shall be installed as shown in the Dreflex pipe project at ∅150 mm and the connection-assembly process shall be protected against potential breakage and / or crushing risk by covering with the filling material specified in the project after completion of line checks.

During all hardened wall production, necessary safety precautions must be taken on the field.

4.12. Expansion joint assembly

4.12.1. Definition

This section covers the requirements related to the supply and utilization of Anchored (Steel Profile and Rubber Seal) expansion joint equipment and also Elastic Filler Type Expansion Joints composed of Bitumen and aggregate those are used with the aim of reacting to the movements that come about as a result of expansion-shrinkage in buildings without damaging the structure.

4.12.2. Anchored expansion joints

General descriptions

This type of expansion joints shall be anchored to the structure with steel edge profile, modular and water-proof rubber seal.

All of the parts constituting the joint component shall feature quality certificated approved by testing institutions approved such as steel, rubber, welding, etc.

There shall be updated certificates belonging to the current year for the documents such as quality certificate, license agreement, etc. Expansion Joint manufacturer shall document that it has ISO 9001 quality certificate.

There must be the plate containing the information such as manufacturer, production date, material specifications, serial no, marks of the quality certificates, etc. on a visible place after assembly on the expansion joint.

Expansion joint shall be designed in such a way to resist against any kind of static and dynamic effect for at least 15 years to be generated by H30-S24 standard truck load values.

Expansion joint should be able to meet the vertical movements up to ±10 mm on bridge-viaduct apron and superstructure.

Finger, gear type, vertical anchored (bolt) type expansion joint shall not be used. Expansion joints composed of profiles and components containing aluminium shall not be used.

In steel bridges, expansion joint equipment shall be fixed by welding on bridge steel construction and connections methods such as bolt, nut, pin, etc. shall not be used.

The detailed designs in accordance with approved bridge-viaduct designs belonging to expansion joint application and the reports belonging to static and dynamic calculations shall be prepared by the Contractor before the joint manufacturing. Within the scope of the expansion joint application designs, there shall be included dimensions, type, unit, elongation and shortening amounts within certain temperature intervals, total movement meeting capacity, pedestal to which the joint belongs, joint gap, all necessary measures, angles, levels, etc.

Expansion joint shall have complete joint, component and assembly warranty for at least 5 years. The joint or components that are damaged due to design, material or assembly during warranty shall be replaced by the manufacturer.

Expansion joint assembly and material specifications

Side steel profile and all anchorage components used in joint component, anchorage plates and anchorage stirrups shall be minimum DIN ST 37*2 (EN 10025 S235JRG2) quality.

In too much aperture joints, longitudinal medium profile shall be minimum DIN ST 52-3 (EN 10025 S355J2G3) quality.

Expansion joint shall be one-piece up to 12 m and shall be composed of two parts in a length to be approved by the Engineer in case that it exceeds 12 m. Expansion joints composed of many additions shall not be used. Expansion joint additional place shall be out of the vehicle road if possible and shall be located on the section where vehicle traffic effect is the least.

Expansion joint shall have geometric specifications in accordance with the diagonal angle of bridge, complete longitudinal and transverse inclination and curb form throughout the bridge apron section in such a way to cover vehicle and pedestrian road.

Steel edge and medium profiles shall be manufactured as the junction of different sections fused by means of hot extrusion method or welding in such a way to have a one-piece section. In profiles that are manufactured with the fusion of different sections by welding, longitudinal welding fusions shall be

conducted by submerged welding and in such a way to execute continuous welding seam and unwanted internal tensions shall be prevented by bringing the steel profile into the furnace after welding process.

Anchorage plates and stirrups shall be fixed on the side profiles by means of submerge welding method in closed environment.

In multi-aperture expansion joints, the directional and planar movement of supporting components placed under the longitudinal profiles shall be achieved with mechanic systems. The joints that feature only the movement system realized due to the elasticity of the rubber or polyurethane material shall not be accepted. The surfaces of the supporting beams that contact with sliding components shall be passed through grinding process and covered with rust-proof steel plate.

Steel edges and medium profiles (longitudinal profiles), support components and connections shall be designed in such a way to minimize fatigue.

Manufacturing tolerance of the seal placing bearing section on the longitudinal profiles shall not be more than ±2 mm throughout the profile.

In the event of horizontal sleeve in longitudinal side profiles, there shall be at least 18 mm diameter air discharge holes on profile horizontal sleeve between each anchorage component fixed under horizontal sleeves. Concrete shall outflow from these holes during the concreting of expansion joint placement gaps and it shall be inspected whether there is any area under longitudinal side profiles that is not concreted.

Profiles shall be painted without waiting after sanding in such a way to ensure surface cleaning of steel side profiles against corrosion. It shall be covered against corrosion and external effects with at least 80-micron zinc-based primer and at least 100-micron thick chlorine rubber or epoxy-based TSE and ISO certified paint. At each phase of paint application, paint film thicknesses shall be measured and checked.

All of the rubber (natural-neoprene) components to be used in expansion joint shall be produced in accordance with the relevant Turkish and EU standards and hardness, rupture strength, rupture elongation, tearing resistance, permanent deformation, ozone, water, oil, petrol-diesel, salt and any kind of chemical resistance, ageing sample tests shall be conducted within the norms of the relevant test methods (ASTM, DIN).

Joint system water impermeability shall be ensured with suitable seal component in one piece. Seal component shall be connected to side profiles in such a way to settle within the a bearing continuing throughout a whole profile, and to avoid using any kind of adhesive, steel profile additional fixation part, bolt, pin, etc, to prevent the flow and leakage of surface waters downwards, to be demountable during maintenance, repair and replacement, not to be torn, broken and removed due to dynamic effects such as traffic and seismic movements and not to contact with vehicle tyre surfaces.

There shall be sheet metal formwork plates in the quality of dead formwork with a wall thickness of 5 mm being attached to the concrete in such a way to constitute a formwork continuing throughout the placement gap.

There shall be edge closing plates fixed at the factory in accordance with the bridge diagonal angle on profile external area left on the curb end section. The angle between the side closing plate and side profiles shall never be constituted by profile cutting and plate welding process to be executed on the site.

Transportation, storage and assembly of expansion joints

Expansion joints must be transported as all of the components are completed and all of the precautions to prevent damage during transportation are taken and it should be elevated from the ground and its contact with ground and water must be avoided by covering if it is not going to be assembled immediately. Damaged and rusty joint components shall not be accepted and assembled.

Expansion joint shall be freed from joint gap, concrete parts, free substances, water, dirt and all foreign substances before assembly. During the replacement of expansion joints that expire their service lifespan, all of the residues of the old joint shall be cleaned before the assembly of the new expansion joint.

The assembly of the expansion joint shall be conducted by expert teams under the supervision and responsibility of the manufacturer.

The resistance of the concrete to be filled into joint gap shall be at least one class above that of the bridge apron. Placement and curing of the concrete shall be executed well and it shall be taken account not to allow formation of gaps and level differences that might cause the fatigue of joint components. If joint gap concrete is not being poured at the same time with the apron concrete, then chemical epoxy-based adherence increasing materials shall be applied on the surface where new and old concretes shall contact each other. Precautions must be taken during concrete pouring so that joint surface and seal component do not get contaminated and contaminated areas must be cleaned immediately. After the concrete sets, all of the transportation clamps, including those on the pedestrian walk, shall be removed. Vehicles shall not pass over the poured concrete until it reaches the necessary resistance.

After the joint gaps are concreted and impermeability seal assembly works are completed, a gap of 15-20 mm shall be left between the concrete and concrete superstructure material with steel profiles and elastic filler material shall be applied to these gaps.

If there is distribution reinforcement within the current reinforcement in the gap of joint placement, then these reinforcements shall be disassembled before assembly and shall be re-mounted after assembly.

After joint placement gap and joint components are ready for assembly, joint component shall be placed into the joint gap by using mobile crane without damaging any joint section and protective paint layer. Joint placement shall be brought to the upper level foreseen in the project with the arrangements to be made by means of hydraulic jacks according to the optic measurements to be made. After projecting the level arrangement, spot welding shall be made between the anchorage stirrups and joint gap on the expansion joint and jack loads shall be discharged and expansion joint shall be hung on the superstructure. There shall be connection welding on one of four anchorage stirrups on the joint component for the fixation.

All of the welding processes to be made in the production plant and assembly site shall be conducted by specialized, trained and certified persons according to the approved and tested procedures.

4.13. Road railings

4.13.1. Definition

This section describes the road railings to be made of steel cables. These shall be constructed in the types and dimensions under the following conditions:

4.13.2. Material

Steel cables

The cables shall have the qualities specified in its drawings.

Steel bollards

Steel bollards shall have the types and dimensions specified in the Contractors drawings. Used steel can also be utilized on the condition that is approved by the Engineer.

The surfaces shall be polished after they are manufactured and be painted to red lead that has the qualities specified in the painting part of ferro concrete iron and the conditions to be included in the special specification.

Fittings

The screws and the other equipment to be used in the connections shall have the quality specified in the drawings and special specification. Besides, they must have homogenous thickness and be coated with zinc. It must be stressed that this coating must be well-fitted and without faults and cracks.

Anchorage

The blocks to be used for the anchoring of the steel cables shall be made in the sizes and types given in the drawings, and it shall have the desired qualities in the concrete, the dose of concrete or the separate specifications.

Painting

All the paintings shall have the qualities in accordance with the aim and the approval of Engineer shall be obtained before supply. The application of the painting shall be carried out in accordance with the manufacturers' recommendations.

Construction methods

Steel Cables

The centre-to-centre distances between the bollards shall be 3 metres when cables shall be used as railings. Bollards shall be placed in their exact elevations and vertically. The holes of bollards shall be filled by compressing through tamping in 10 cm layers.

Concrete or stone basement with minimum dimensions of 30x30x10 shall be placed on the bases of the bollards at two ends. Before the cables are well strained, they shall be they shall be threaded through holder equipment of the bollards and then be strained until the desired strain is achieved.

The cables shall have a 650 kg tensile force after the cables are strained and the bollards are connected. The stretching device distances shall roughly be 150 meters and through these, the tensile in all parts of the cable shall be ensured equally.

Anchorage fittings in the end bollards shall be executed in accordance with the specifications given in the project. In case that the land conditions of the road are not appropriate to realize these fittings, another type can be eligibly accepted. For the installation and connections of the cables, specifications within the project and the conditions above shall be respected.

4.14. Guardrails

4.14.1. Definition

This section includes the manufacturing and in-situ installation of separator and protector guardrails that shall be installed to ensure traffic safety.

4.14.2. Types of guardrails

- Steel wires stretched between the steel stakes
- Steel profiles (rails) installed with steel wedges between steel stakes
- Concrete guardrails

4.14.3. Guardrail elements

Protective guardrail beginning transition curve

- Normal cur guardrail elements
- Cap part
- Tip part
- Expansion addition
- Stake
- Normal wedge
- Couplers.

Guardrail elements shall be manufacture and installed in accordance with the designs and their special specification.

Following the processes of cutting, perforating, shaping and welding, all elements of guardrail shall be galvanized as the last process.

During installation, no processes such as perforating, welding etc. that shall give damage to galvanize shall be allowed.

4.14.4. Material to be used

In the supply of the materials to be used in the manufacturing of steel guards, TS 550 << General Technical Delivery Requirements for Steel>> shall be applied.

All elements, except for the screws, bolts and distance rings, shall be made of St 37 steel. It shall be certified that the features of the elements regarding tensile strength, yield strength, yield limit, breaking elongation are within the limits specified by Turkish or EU standards. For the screws 4,6 quality shall be accepted. Screws, bolts and distance rings shall be made of steels conforming to TS 61, TS 79, TS 80, TS 528, TS 1020, TS 1021 and TS 1026 norms and they shall be in dimensions specified in the project. Like all other elements, these shall also be hot dip galvanized.

4.14.5. Manufacture of materials

Rail of guardrail (W-Cross Beam)

They shall be manufactured from DKP stripe metal sheets with 470 mm width and 3 mm thickness and have the length of 4300 mm. according to their drawings, they shall be perforated, the burrs and the surface shall be cleaned and then be galvanized.

Profiles shall definitely be smooth and uniform. Bended, crushed profiles or the ones with broken sections are not appropriate.

The guardrails that shall be placed in the curves, with a radius lower than 40 meters, shall be shaped in the workshop. This shaping process shall be before galvanization.

End parts and capping parts

End parts and capping parts that shall be used in guardrails shall be manufactured in line with designs. Burrs and surfaces are cleaned. They get ready after galvanization process.

Steel wedges

In case that different types of wedges are used in separator and protector guardrail beginning transition curves, normal sections or in bridges, every wedge shall be in the dimensions, perforated, pressed, shaped, welded, cleaned and galvanized as specified in the drawings and be manufactured from DKP metal sheet with 4 mm thickness.

The metal sheet "wedge plates" to be used in the beginning transition curve shall have been cut in according to the drawings, they shall be welded to wedges and stakes by both sides, cleaned and galvanized.

Steel stake of guardrail

All stakes to be used in guardrails shall be manufactured by cutting from the profile, perforating and galvanizing in accordance with the designs and shall made be ready for in-situ installation. Generally, the separator and protector guardrails in bridges are used as 1-100 and in other places as 1-140.

Fittings

Fittings such as screws, bolts and distance rings shall be manufactured in accordance with the conditions specified in Steel part of this specification.

Refuge transition (Mountable demountable system)

Unless a different special system is desired, the system that is applied in bridges' and viaducts' central refuge can be applied as the same in these sections.

Special docks shall be built in asphalt grounds for only stakes and stakes shall be projected in a way that they shall be able to be manually taken out and mounted again when desired. (in order to take out from their places and mount the stakes again when requested, rails of the guardrails must have been dismantled form the connection points beforehand.)

Galvanization of steel guardrail elements

After all manufacturing processes of the steel elements to be used in guardrail system such as their cutting, perforation, shaping, welding…etc. are completed, they shall be galvanized in accordance with TS 914 <<Zinc Coating (with hot dip method)>> or ASTM 123 (last version) norms.

The zinc ingot to be used shall be in line with ASTM B-6 conditions and minimum ÇK-1-1 quality high-quality-grade zinc ingot shall be used.

Aluminium ratio in bathing during galvanization shall not exceed 001 %. Coating shall be preferred to be dull colour and grey (not bright).

It shall also be ensured that the temperature of the bath during galvanization process shall be kept between 4550C and 4650C. It shall also be ensured that the bolt holes shall not be coated and the zinc shall not be dried as drops. The galvanized material shall be placed in the storage area and following the positive report is obtained, they shall be used.

The samples shall be subjected to the following tests to determine the quality of the galvanize:

- Test method for weight of coating in line with AST A 90
- Adhesion control test in line with AST A 123
- Dip test in line with AST A 239
- Bending test in line with AST A 143
- Test for thickness of coating in line with AST A 376

4.14.6. Installation of guardrail

During the process of in-situ installation of guardrails, all necessary precautions must be taken to avoid deteriorations or tears of galvanized surfaces.

Aspects to be taken into account during installation:

- Distance between stakes,
- Gap from the centre of the stake to its axis
- Height of stake
- Distance to traffic lane

i. For the sections having one end open and the other in on the bridge, the placement of the stake is started from the bridge or viaducts. Stakes are placed in accordance with the designs by advancing forward or backwards.

ii. For the sections having both ends open, placement is started with capping.

iii. In sections where the longitudinal grade is close to 1% in highways, public and provincial roads and in the sections where height of fill is less than 1 meter, the distance between the stakes (from axis to axis) can be 4 metres.

iv. For the guardrail sections which are on two bridges, the placement of stakes are started from the bridges. In case that the last gap in between is not completed with standard w-section girder element, special element shall be manufactured through in-situ measurements.

W steel girder (Guardrail rail)

- W steel girders shall be installed on stakes with wedges as is shown in the designs by taking the direction of traffic into account. In the lap portions of W steel girders, it shall be ensured that they contact each other with full surface.
- At the beginning and dilatations of the bridges, arrangement for expansion additions must be appropriately designed.

Other aspects

- Every guardrail section shall be started with a special transition curve and ended with special tip part as shown in the designs.
- Manufactured capping part, in accordance with the designs, shall be placed in refuge transitions and juncture branch capes.
- The bolts in the joints and the ones used for connection of wedges to stakes shall be screwed fully with regular torque. Guardrails, installation of which are completed, shall be placed in a way to ensure smooth and continuous appearance.

5. RAILWAY INFRASTRUCTURE WORKS

5.1. General

5.1.1. Scope of works

These requirements cover general technical criteria and conditions on the materials to be used and works to be done concerning the track construction of Railway superstructure.

In all construction and manufacturing, the provisions of these requirements, if otherwise not stated hereafter referred in Directives of 2008/57/EC, 96/48/EC and 2001/16/EC shall be respected.

The Contractor is required to prepare design for all infrastructure and superstructure works including electro-mechanical works in accordance with the technical specification and most updated version of TSI (technical specification of interoperability). The Contractor shall perform additional geotechnical investigations, topographical survey and site investigation study if needed for this propose.

The Contractor shall invite the Engineer and inform the DGII/Employer to attend all tests and shall submit the tests procedures for acceptance.

The Contractor shall submit relevant technical characteristics of all machineries and devices for measurement along with those of all tools for testing purposes to the Engineer for approval to operate them during the project.

5.1.2. Line materials and equipment

Rail

Rail type

Rails shall have 60 E1 section stated in Figure A.21 in EN 13674-1. Running (linear) meter theoretical weight of rails is 60.21 kg.

Rail lengths

While standard rail length is 36 m, there shall be shorter rails. Rails shall be supplied imperforate. Rail holes shall be drilled, if necessary, by means of rail drilling machines for ends that shall constitute fish plate joints.

Quality of steel

The quality of steel to be used in the manufacturing of rails shall be in accordance with 260 steel quality stated in EN 13674-1.

Profile and orientation class

Profile class of rails shall be "X" and orientation class shall be "A" as stated in EN 13674-1.

Acceptance conditions

In acceptance process, rails shall be inspected according to the requirements and test frequency stated EN 13674-1 whether rails comply with the qualities stated in specifications/requirements and acceptance certificate shall be issued by the Engineer.

Tolerances

Dimension tolerances of rails shall comply with EN 13674-1.

Loading, transporting, unloading, handling, storage

Loading and unloading of rails shall be conducted by means of equipment holding the rails from their heads that can move up and down horizontally.

The number of lifting units shall be sufficient to prevent formation of permanent deformations on rails.

In transportations by sea, rails can be packaged by 6 or 8 rail in such a way that the head of a rail is between the feet of other rails with the aim of protecting the rails from impacts and permanent deformations. It is the responsibility of the Contractor to make the packages ready for inspection by opening them for final inspection.

Rails shall be on their feet and shall be lined on a flat surface in such a way to compose parallel layers. There shall be square timbers that are placed perpendicularly to the rails above each rail row and in such a way that the distance between each other shall not be more than 6 meters. Rails shall be stocked in maximum 6 layers. In the event of permanent deformations on rails due to the inappropriateness of the surface of stock area, these rails shall be rejected.

Necessary precautions shall be taken to prevent formation of permanent deformations on rails during handling and to prevent formation of damage to rails by the Contractor. Rail tongs shall be used for short distance movements. Rails shall never be in contact with the ground during storage and they shall be stocked on square timbers or steel joists.

Concrete sleeper

On all of the railway tracks, mono block concrete sleepers manufactured in accordance with TCDD's Pre-stressing – Pre-shrinking Concrete Sleeper Technical Specifications shall be used. Unless otherwise stated in the EN 13230 Technical Specifications for the supply of concrete sleeper, the requirements stated in -1 and -2 shall be respected.

Sleepers shall be transported and stocked with square timbers in between them. Square section timbers shall be placed in storage areas of sleepers.

Sleepers shall be stocked on a solid ground. Sleeper stock layer number shall not exceed bearing capacity of the ground.

Storage area shall be approved by the Engineer.

Storage area shall be arranged in piles of 1.000 sleepers. There shall be 2 meters space between each pile.

The Contractor shall demonstrate due care during loading, unloading and handling of sleepers so as not to cause damage to sleepers. Damaged sleepers shall be rejected and marking signs shall be engraved.

Elastic connection system and components

Rail sleeper connection shall be in accordance with the type of the elastic connection system type W14 that is in use by TCDD.

The supply of connection materials shall comply with TCDD's W14 Type Elastic Connection System Components Technical Specifications.

Loading, transporting, unloading, handling, storage

It is the responsibility of the Contractor to choose the packaging method that shall not cause damage or corrosion to the materials during the processes.

The damaged or corroded materials shall be rejected.

Ballast

Supply of ballast shall comply with the TCDD's Ballast Technical Specifications.

All of the phases of transporting, manufacturing and constructing shall be realized in such a way to obtain a uniform material.

Material shall not be contaminated by mud or any other harmful material.

Material shall not be unloaded from a height from which bigger parts might segregate from smaller parts.

Ballast stocking field shall be free from external factors that might threaten the material to be stocked.

Material shall be stocked on flat and well-drained places in such a capacity to bear the material to be piled free from foreign substances.

Unless piled on concrete or asphalt concrete or any other stabilized area that can be accepted, a compressed sand base in a thickness of at least 30 cm shall be formed and it shall be stocked on this base. Moreover, picking the sand particles within the ballast that has been stocked might be subjected to re-screening process.

Height of the heaps shall not exceed 5 meters.

Permanent fishplates and connections

Rail-rail connection in joints that are not welded shall be maintained by means of fishplates. In permanent fishplate joints, there shall be two holes on both heads of the rails and fishplates shall be connected with these holes.

Fishplate

Supply of fishplates shall comply with the TCDD's Fishplate Technical Specifications.

Bolt and nut

The choice of manufacturing method of the steel to be used in the manufacturing of fishplate bolt and nut shall be decided by the Contractor and approved by the Engineer.

Manufacturing process of fishplate bolt and nut shall comply with UIC 864-2 O.

Steel bars to be used in manufacturing shall comply with the mechanical specifications stated below:

- Tensile strength 450-570 N/mm2
- Elongation after breaking minimum 20%

Dimension of bolts and nuts shall comply with the technical design approved by the Engineer.

Double layer spring washer

Elastic washers shall be made of spring steels.

The choice of manufacturing method of the steel shall be decided by the Contractor.

The Contractor shall specify the basic characteristics and qualities pertaining to this task in its offer and shall not make any change without receiving the authorization of the Engineer.

Chemical and mechanical specifications of the spring steel to be used for elastic washer shall be those of 51 S 7 steel as stated in UIC 864-3/0.

Drawings of elastic washer together with its tolerances shall be supplied by the Contractor to the Engineer and DGII.

Acceptance and tests

All of the components constituting the permanent fishplate connections shall be subjected to the tests and inspections stated in UIC-EN standards and inspection reports shall be submitted to the Engineer for an approval.

Marking

The permanent fishplate connections shall include following information:

- DGII inscription
- Quality of the steel used
- Last two numbers of the year of manufacture
- Manufacturer identification marking

Temporary fishplates

These shall be used with the aim of connecting the rails that are used imperforate for composing a frame for the works of temporary laying process and that shall be welded in the following phase in such a way to let the passage of vehicles with a speed of 30 km/hour over the line.

The choice of the material and the type of the connection to be used for the abovementioned purpose is the responsibility of the Contractor. However, these connections shouldn't damage rails. In the event of damage to the rails those shall be replaced by the Contractor.

Insulated rail

In order to achieve electrical insulation of rail joints for signalization, insulated rail shall be used.

Insulated Rail shall comply with TCDD's Insulated Rail Technical Specifications.

Switches

General

Switch joints shall be welded either in the production plant or by means of the method to be approved by the Engineer depending on the method of lying on the lineIn the geometrical tolerances of switch joints welding, the geometrical tolerances given for line welding shall be valid.

Geometrical specifications of switches are specified in the relevant designs.

Axle pressure on switches, whose geometrical specifications are provided in their project, shall be taken as 22, 5 tons and speed shall be taken as 30 km/hour.

The Contractor shall submit to the Engineer the report including material specifications, technical drawings, manufacturing project details and other technical information to be used in the manufacturing of the switches. The Engineer has the right to ask for amendment in the specifications stated in the report. In that event, necessary amendments shall be done by the Contractor.

All switch parts shall be operable between –40 C° + 50 C°.

There shall be apparatus in the switches to prevent formation of snow and ice accumulation. Switches shall be equipped with hydraulic point machines and locking apparatus in sufficient numbers. Relevant technical information and drawings shall be submitted to the approval of the Engineer.

Dimension tolerances

Main dimensional tolerances of switches are stated in the table as construction and operation tolerances. Construction tolerances shall be valid in the event of pre-assembly in the production plant of the switches and in the inspections when laid on the line. Switches should remain within operation tolerances in the inspections to be conducted on switches after an operation period of 12 months.

In the geometrical tolerances other than those given below, the geometrical tolerances given for the lines shall be valid.

	Nominal dimension (mm)	Construction tolerances (mm)	Operation Tolerances (mm)
Rail Gauge	1.435	+2/-2	+2/-2
Flange channel width	40	+0,5/-0,5	
Check-rail gauge	1.395	+0,5/-0, 5	≥ 1393
Flange path	1.355	≤ 1356	≤ 1356

Tests and inspections

All of the parts composing the switches shall be tested according to the relevant EN standards in respect of conformity with the values stated in the approved report and test results shall be submitted to the Engineer for approval.

The switches that are pre-assembled shall be inspected by the Engineer in respect of the dimensions stated in technical drawings. In these inspections, conformity with rail-gauge, torsion, flash, longitudinal level value and tolerances shall also be inspected apart from dimensional tolerances shown in technical drawings.

Switches shall be subjected to dimension and performance tests after completion of all processes related to laying on the line and connection to the lines.

5.1.3. General terms related to line materials and equipment

All of the materials to be used in superstructure formation shall be guaranteed for 5 years starting from the temporary acceptance of the line against any kind of manufacturing and workmanship faults that couldn't be detected during acceptance and inspection periods.

In the event that the relevant standards are not stated on rails, concrete sleepers, elastic connection components, fishplates and connection components and isolated rails to be used in superstructure formation, there shall be manufacturer identification marking, last two numbers of the manufacturing date and DGII's inscription in accordance with the technique in a place that shall be visible and that shall not vanish.

It is the responsibility of the Contractor to determine packaging, transportation and storage procedures with the aim of preventing the formation of permanent damages that might affect the utilization of materials to be used in superstructure formation negatively during transportation and storage.

The technical drawings belonging to the gauges prepared according to minus and plus tolerances stated in the technical drawings submitted to the Engineer for approval intended for rails, insulated rails, check rails, intermediate passage rails, concrete sleepers, elastic connection components, fishplates and connection components, switch and switch parts to be used in the superstructure formation shall be submitted to the Engineer for approval. Following the approval of gauge technical drawings, the Contractor shall submit 3 sets of gauges to the Engineer (male and female) in accordance with the technical drawings.

If the Engineer deems it necessary, he/she shall have other tests conducted stated in relevant standards and specifications. The materials found faulty at the end of inspections and tests shall be rejected. In the event of dispute as a result of last inspections, controls and tests, all of the tests and inspections stated in relevant standards and technical specifications shall be reassigned by the Engineer.

5.1.4. Infrastructure construction works

Superstructure construction works shall be performed in accordance with Technical Specifications (TSI) referred in Directives of 2008/57/EC, 96/48/EC and 2001/16/EC (most updated version if any)

5.1.5. Rail welding works

Rail welding works shall be performed in accordance with TCDD's Rail Welding Technical Specifications, if otherwise not stated, along with Technical Specifications (TSI) referred in Directives of 2008/57/EC, 96/48/EC and 2001/16/EC (most updated version if any)

5.2. Infrastructure construction

5.2.1. Scope of works

These specifications cover technical criteria and conditions pertaining to the construction of IMT.

5.2.2. General

Before starting the track construction works, the Contractor shall submit for the approval of the Engineer, the methodology of construction works, materials, machines and equipment to be used. The Engineer

reserves the right to ask for explanation, additions and amendment in the methodology proposed. Track renovation works shall be conducted based on the approved methodology.

In all construction and manufacturing, the provisions of these requirements, if otherwise not stated hereafter, along with Technical Specifications (TSI) referred in Directives of 2008/57/EC, 96/48/EC and 2001/16/EC shall be complied (most updated version).

Project Criteria

Operational project speed to be applied in straight line shall be V= 30 km/hour. Axle pressure of the line shall be 22.5 tons.

Line rail gauge shall be 1435 mm and within the limits corresponding to the design speed on the timing table used in the tracks newly built by DGII.

Sleeper intervals shall be 600 mm and sleepers shall be placed on the line vertically and intervals shall be regular and equal.

Minimum Horizontal Curve radius: 200 m.

In any inconsistency the most updated (latest version) of TSI has privilege. The Contractor is required to prepare shop drawings in accordance with the latest version of TSI.

5.2.3. Establishing and removal of the construction site

It is the Contractor's responsibility to find a suitable place for the establishment of the construction site.

Following the completion of works, it is the responsibility of the Contractor to remove the parking tracks and construction site and to clean the area and bring the site to its previous status.

5.2.4. Material supply

All the superstructure materials required (such as rail, sleeper, fasteners and minor track materials, ballast, rail welding materials, switch points, etc.) shall be supplied by the Contractor and at the needed milestones of the approved work program.

Rails, switch points, sleepers and ballast to be used in the track construction shall be delivered to the site of the work or to the nearest suitable station and stocked in a proper way according to specifications and as directed be the Engineer.

Minor materials shall be stored in warehouses to be agreed between the Engineer and the Contractor.

The protection of the materials to be used is the responsibility of the Contractor.

5.2.5. Construction machinery parking track

The stations in which track machinery shall be parked shall be agreed by the Contractor and the Engineer.

On condition that there is suitable place in the station site, new temporary tracks may be established in order to park the track construction machinery.

5.2.6. Removal of the existing track

In the locations indicated in the drawings the existing track and switches must be removed in such a way to reduce the time of interruption of the line,

The removed tracks and switches shall be stored in a place and in a way to be found suitable by DGII.

The rails shall be cut by the Contractor from a point 10 cm away from their welding points or be divided from joints (in at least 36 m or multiples), whichever is appropriate and agreed by the Engineer/DGII. Rail shall always be sawed or cut with the help of a disc. Rails and sleepers shall be stockpiled on their bases and shall be lined on a flat surface in such a way to compose parallel layers with timbers. There shall be square timbers that are placed vertically to the rails above each rail row and in such a way that the distance between each other shall not be more than 6 meters.

The Contractor will remove the existing ballast, transport and stockpile as agreed with the Engineer.

Sub-ballast and sub-base material of the existing track to be relocated may be used for the new formation if the material is suitable.

All materials of the track superstructure (rails, sleepers, turnouts, catenary, signals and other wayside equipment, etc.) removed by the Contractor shall be the property of DGII.

5.2.7. Ballast laying

Ballast cross section is specified in the typical drawings according to line types. Ballast shall be laid in two phases as 1st layer ballast and 2nd layer ballast.

First layer ballast

Ballast shall be laid as a horizontal layer on straight line and with proper cant in curves. Ballast shall have a width of 3,6 m (for single line), 8.1 m (for double lines) and 12.6 (for triple lines) and thus considering the 5% transversal gradient of the sub-ballast shall have a thickness of 30 cm under sleepers on the side of the inner rail and 37,5 cm under the sleepers on the side of the outer rail for double lines. The minimum ballast depth under the sleepers shall not be less than 30 cm.

The layer shall be laid by cable or laser guided ballast finisher and compacted with vibration cylinder with suitable and sufficient power. Ballast shall be supplied by trucks from the quarry and the materials shall be laid throughout the line in accordance with single-and double-line profile.

Ballast shall be compacted slightly without causing any deterioration or breakage in the aggregate and thus a uniform and flat surface shall be obtained.

Vehicle traffic is definitely prohibited on the completed layer.

After ballast layer is completed, it shall be inspected by the Engineer and approved.

Second layer ballast

The necessary remaining ballast (2nd layer ballast) for tamping and final ballast profile shall be brought by ballast wagons from storage stoking piles. Ballast wagons should allow adjusting the amount to be unloaded. Ballast shall be loaded to ballast wagons by rubber wheel loaders.

Each lift from the initial ballast layer made by tamping machine shall not exceed a maximum of 10 cm in thickness and shall be uniformly spread and compacted with a minimum of four passes of tamping machine.

Profiling of the ballast shall be done by ballast regulator after each passage made by tamping machine. Regulators shall clean the ballast excesses between rails and sleepers by ballast brushes.

5.2.8. Long welded rail

The purpose of long welded rail (LWR) is to avoid rail joints and prevent rails from being subject to excessive thermal tensions. The rail temperature at which the LWR must be formed and joined is named Neutral Temperature and shall be abbreviated as NT hereinafter.

The LWR are after converted into Continuous Welded Rails (CWR).

LWR formation

LWR shall be formed in neutral temperature. NT can be obtained in natural or artificial ways. Tensioning or heating method can be used with the aim of achieving NT in artificial ways. NT is around 20 ^{0}C and shall be determined by the Engineer, on the base of temperature recording over time, before works start.

LWR formation under natural heating

LWR shall be assembled when NT is reached by natural heating and when it is stable in ± 30C interval within formation period. If this condition is not met, processes shall be ceased.

LWR formation shall be composed of the following processes with the welding of two temporary semi-frames;

a) Removal of rail-sleeper fasteners of all sleepers in two temporary semi-frames in which LWR shall be formed (connections shall be tightened in other halves of temporary frames and these sections shall be named as basis frame (MS).

b) Removal of temporary fishplates

c) Placement of rolls with diameter of at least 2 cm vertical to rails on a rail settlement site at each 10 sleepers starting from the MS end after rail is lifted and plastic plate pads are lifted

d) Vibrating the rails by wood sledge hammers or special vibrators with the aim of ensuring free expansion of the rail

e) Arranging the rail welding interval when NT is reached in ±3 0C interval and taking the expansion rolls starting from MS and replace the plastic plate pads on sleepers

f) Assembling the rail-sleeper connections starting from MS to the joint to be welded. During this process, starting from MS, rail-sleeper connections of 40 sleepers and then of one sleeper at each three sleepers from then on shall be made and squeezed.

g) Welding the joints

h) Assembling other rail-sleeper fasteners whose assembly wasn‘t conducted during welding process

i) Following the pouring of thermite into the mould, loosening the rail-sleeper connections of 40 sleepers starting from the joint with the aim of balancing the thermal tensions on 12 m section on both rail sides.

j) After one hour, tightening the rail-sleeper fasteners that were loosened at j step.

If rail temperature is under the temperature that is necessary for the formation of SKR, "rail tensioning" or "rail heating" method shall be used.

a) Unloading: The Contractor shall own the equipment necessary for unloading the switch parts without impact and slowly.

b) Ballast layer shall be compacted up to the level determined by means of the same method used for the line.

c) Placement of sleepers shall be in accordance with assembly drawings in the event that the switch is laid on the line as disassembled. Rails shall be clamped by temporary fish plates and shall be imperforate according to assembly drawings.

d) All of the connection components shall be duly fastened and tightened.

e) Completion ballast to achieve the desired level shall be unloaded on the line.

f) Tamping and levelling processes shall be conducted by appropriate tamping machine.

g) During continuous welded rail processes, temporary fısh plates shall be removed and

joınts shall be welded by means of aluminothermic welding.

After switch is laid on the line and welded on the line, following tests and inspections shall be executed:

a) Whether all of the parts are arranged in accordance with technical drawings.

b) Whether dimensions stated in Superstructure General Technical Specifications are within tolerances.

c) Whether connection components are duly fastened and tightened.

d) Whether levels and alignments are within tolerances.

e) Conformity with other features stated in these specifications.

The faults detected at the end of the inspection shall be amended by the Contractor.

It is the responsibility of the Contractor to supply measurement tools with the necessary precision.

5.2.9. Installation of guard rail

Where shown in the drawings guard rails (check rails) will be installed with the aim to reduce the consequences of derailment on some part of the route.

Special sleepers equipped with additional fasteners will be necessary.

5.2.10. Installation of buffer stoppers

Buffer stoppers will be installed by the end of spur tracks to reduce the risk of accidents caused by uncontrolled wagons or miscalculations during shunting operations.

Scope of Works

This technical specification pertains to the manufacture and supply of buffer stops with different working mechanism methods and different amount of energy absorption for use with 60E1. For rolling stock vehicles, railbound construction and maintenance machines (EN14033) in emergency cases stopping without serious injury to the driver and passengers. This technical specification pertains to the manufacture and supply of fixed buffer stops to be installed on track ends. The manufacture shall offer fixed buffer stops installed on track and/or on concrete construction.

The buffer stops, fixed buffer stops and braking wheel stop sets shall be design for rolling stock vehicles, railbound construction and maintenance machines (EN14033) with axle loads of up to 22,5 ton.

The buffer stops and fixed buffer stops (if designed for track installation) shall be installed on track with electrical circuit and/or on track with electronic signaling or on depot track.

The buffer stops and fixed buffer stops (if designed for track installation) shall be installed on ballast track or on depot track (non ballast track).

The buffer stops and fixed buffer stops shall be install on track ends with concrete sleepers, 1666 sleepers per km or on depot track fasten to concrete spots.

The inspection and acceptance of the buffer stops, fixed buffer stops and braking wheel stop sets shall be performed by DGII.

The buffer stops, fixed buffer stops and braking wheel stop sets shall be installed on rail heads.

The buffer stop and fixed buffer stops shall be designed to arrest the full range of trains between the heaviest and lightest using a track without risk of serious injury to people on the train. Trains shall be brought to a controlled halt from the determined impact speed with an average deceleration rate not exceeding 0.15g (1.47 m/s2). Where site constrains make it unavoidable, lightweight trains may be subjected to higher deceleration rates, but the average acceleration rate for any train shall not exceed 0.25g (2.45 m/s2). (see section 3.11 for the required declaration for each type).

The buffer stops shall be designed with side strikes with height of 1060±20 mm above top of the rails. In special cases the buffer stop shall be design with additional to the side strikes also center strike with height of 865±10mm above top of the rails.

General requirements

The buffer stops, fixed buffer stops and braking wheel stop sets shall be designed for use with 60E1.

The buffer stops and fixed buffer stops shall be designed for use on standard gauge 1435 mm (-2,+5) railway track. The rail seats on each sleeper have nominal inclination of 1:40.

Braking wheel stop sets shall be design to use on rails in depot and marshalling yards which have nominal inclination of 1:20 and of zero.

The buffer stops and fixed buffer stops shall be designed to enable railway vehicles stop safety at speed up to 10 km/h or at speed up to 15 km/h.

The braking wheel stop sets shall be designed with height above the rail head of 85 mm or 125 mm to enable railway vehicles stop safety at speed up to 5 km/h or at speed up to 10 km/h.

5.2.11. Stabilization of the line

Dynamic line stabilizer shall be used with the aim of stabilizing the line within a short time and under controlled parameters,

Dynamic line stabilizer:

Technical characteristics

a) Stabilization method: Stabilization shall be conducted while applying a vertical static load on the superstructure and vibration in the horizontal direction.

b) Stabilizer Characteristics

- Frequency: Adjustable 0-50 Hz.
- Horizontal force (depending on frequency) 0-320 kN
- Vertical Load: Adjustable 2 x 120 kN

Level Tool

Level tool shall allow to determine the status of the line during the operation and to control the vertical load affecting each line.

Cant readings during stabilization process:

- Cant readings shall be done by a digital reader during stabilization.
- Stabilization speed: Stabilization speed shall be within 700 – 1.200 m/hour.
- Changes in line characteristics: Stabilization process shouldn't affect level and direction quality of the line.

5.2.12. Welding rails

Both butt-welding and aluminothermic welding processes shall be done according to TCDD's Rail Welding Technical Specifications.

5.2.13. Setting out and marking the line

General

Permanent marking shall be effectuated along the line with a method that shall not be affected by the works and natural effects for the inspection in accordance with geometric inspections and geometry of the maintenance studies. The Contractor shall submit to the Engineer a report with marking method, marking frequency, values to be found on marks and materials.

Line geometry manual

The Contractor shall prepare a manual with the geometry of the line with reference to the marking. In this manual, there shall be general geometric specifications of the line and also distance values of the marks to the line that will allow to check the correct setting out and to restore it any time it is need should arise. The Acceptance conditions of infrastructure works

5.2.14. Scope of works

These technical requerements describe the technical conditions for giving certification to the execution of necessary measurement, inspections and examinations necessary in respect of superstructure on the line section.

5.2.15. Infrastructure works

Railway superstructure works cover the following:

- Supply and transportation of track materials (rail, sleeper, switch points, fasteners small materials, etc.),
- Laying and compacting sub-ballast according to Sub-Ballast Technical Specifications
- Laying Ballast on the line according to attached Ballast section,
- Installation of the track
- Execution of tamping, dressing, leveling and stabilization works and execution of 1st, 2nd and 3rd maintenance of the new line in intervals to be determined by DGII with the aim of ensuring stability of the line and supplying geometric conditions.
- Assembly of isolated rails where necessary for the signalization,
- Supply and assembly of 60 E1 counter-rails; project shall be prepared by the Contractor and approved by the Engineer,
- Measurement of the line by means of Route Geometry measurement device, Route and Overhead Measurement Machine and Non-destructive Inspection machine,
- Execution of the protective grinding of the rails by Rail Grinding machine.

5.2.16. Innspection procedure

Measurements, inspections and audits

Before the acceptance of superstructure works, following measurements, inspections and audits should be completed:

- Relative geometry of the line,
- Rail gauge of the line,

- Absolute geometry of the line. Comparison between the actual location and project location of the line
- Welding measurements and certification
- Measurement of joints gaps,
- Measurement of joint geometric deviations
- Placing the sleepers, assembly and junction of connection components, plastic plate pads and isolation materials
- Inspection of ballast profile
- Inspection of rails, sleepers, connection components, cables and other components,
- Inspection of all line materials in accordance with the relevant acceptance criteria defined by DGII.

Procedures

Following procedures shall be conducted in order to carry out the above- mentioned inspections and measurements:

a) Preliminary Audit

b) Superstructure measurements and reporting

c) Measurement of the whole line by Route and Overhead Measurement machine

d) Visual Inspection of Superstructure Materials by Touring on Foot

e) Measurement of the whole line by Non-destructive Inspection Machine

f) Determination and reporting of speeds on the line

g) Delivery of the results of all measurements, tests and examinations

h) Certification of the Line

Preliminary audit

Preliminary audit shall be done on the whole line in order to determine the scope of the work and acquire the knowledge of the line. A report shall be prepared at the end of the preliminary audit.

Infrastructure measurements and reporting

The Contractor shall submit relevant data on all machineries and devices for measurement to the Engineer.

Superstructure inspection of the whole line section shall be done by means of Track & Catenaries Inspection Machine and other necessary equipment. Measurement results, video records, photographs, notes, schemes and other documentations shall be submitted to the Engineer. Superstructure inspection is composed of the audit, inspection and measurement works stated below:

Track & Catenaries inspection machine

Railway geometry inspection shall be conducted and recorded by a railway measurement machine supplied by the Contractor and approved by the Engineer in accordance with the Technical Specifications for Machineries (Machine specified as in M6). Longitudinal leveling and direction measurements shall be done by means of either inertia system or rise of arc method (preferably asymmetrical) or by the combination of both methods.

Inspection of the superstructure in respect of geometry by route and overhead measurement machine shall include the measurement of the following parameters and results shall be presented graphically and numerically:

- Rail Gauge
- Cant
- Direction
- Leveling
- Torsion

Route and overhead measurement machine should feature contact-free (laser) measurement system.

Measurement speed of the route and overhead machine should be min. 160 km/h.

There should be video recording showing both the general status/periphery of the line and also the status of the connections during the measurement.

Measured parameters shall be recorded graphically and numerically and outputs shall be given graphically and numerically as well.

Visual Inspection of materials

Inspection of rails:

- Measuring the rail profile/section (abrasions)
- Inspection of rails with ultrasonic examination (overall/drilling method)
- Inspection of rails in respect of rail defects (undulation, head-check, etc.)

Inspection of sleepers:

- Inspection of sleeper numbers
- Inspection of cracks and broken sleepers
- Inspection of sleeper distances and axial deviations

Inspection of ballast layer:

- Conformity of ballast layer to the type section, amount of ballast under sleeper
- Quality of ballast layer, pollution and deterioration status

Inspection of connection components:

- Visual inspection of rail-rail connections

- Visual inspection of rail-sleeper connections

Inspection of switches:

- Inspection of the switch core, latch and rail apparatus
- Inspection of switch sleeper and connection components

Inspection of welding:

- Inspection of welding with ultrasonic examination (overall/drilling method)

Measurement of the whole line by non-destructive inspection machine

The vehicle to be used for non-destructive inspection may be a railway vehicle.

The vortex currents and ultrasonic measurement equipment which shall be accommodated on the system to be used for detection of rail defects on the machine may be on the same machine and also, it may be on a different machine. As a result of the measurements to be made by the machine / machines, the whole of the rail head and body and the projection of the rail frame on the rail bottom shall be checked.

The system specifications of the vortex currents and probes and devices to be used shall conform to EN 13860.

The inspection reports of the automatic devices and manual devices shall have the same specifications and mutually compatible.

The inspection procedure shall incorporate the definition of the rail, reference documents, qualifications of the staff, who shall perform the inspection, condition of the rail, inspection zones, preparation of the scanning surfaces, contact provision media, definition of the inspection equipment, ambient conditions (environmental conditions), scanning plan, definition and sequence of the inspection works, assessment and recording levels, characterization of the defects, acceptance levels and inspection report.

The inspection procedures shall conform to the latest editions of RT / CE / IS and other related CEN standards.

The inspection report shall incorporate the contract number, rail definition, inspection time, location of the inspection, definition of the inspection probes, condition of the rails on the inspected line, ambient conditions, definition of the equipment used, relevant standards or technical information which are referred to, reference to the inspection procedure, the names, surnames, qualifications and signatures of the persons performing and approving the inspection and inspection results and deviations as compared to the values stipulated by the procedure, if any.

Determination and reporting of speeds of the line

As a result of the inspections, an average and maximum speed schedule shall be prepared on the line section according to the current status of the route.

Delivery of results of all measurements, tests and examinations

The results of all measurements, tests and inspections shall be presented to the Engineer. All of the measurements and inspections shall be certified in this report. Following documents shall also be issued in order to be ready before acceptance:

- Welding and voltage processes records
- Records pertaining to the assembly and tightening of rail connection components
- Line examination records
- Documents certifying the studies pertaining to the route,
- Documents pertaining to the inspection, acceptance and approval of route materials

Certification of the line

A certification shall be granted for the line section in question at the end of the measurements and examinations conducted.

5.2.17. Line geometry measurement parameters

Here below are given the definitions of the measurement parameters based on the definitions given in EN 13848 -1. Measurement results shall be certified in accordance with the following parameters and requirements.

Typical cross-section

Ballast cross-section is given in the Drawings in Volume 5 of Tender Documents in accordance with line types. Ballast cross-section shall conform to these types for each line type.

Rail gradient

Rails shall be laid with a gradient of 1:40 towards the line center. This gradient shall be ensured by the gradient of the rail settlement area of the sleepers.

Rail gauge

Distance between the rail gauge surfaces of two opposing rails measured 14 mm below the rail head. Rail gauge difference between any two adjacent sleepers shall not exceed 1 mm.

Cant

Height difference between two planes measured on the base of the angle between the horizontal reference plane and the plane formed by two adjacent rails.

It is expressed as the opposite leg height of the right-angled triangle with a hypotenuse of 1500 mm.

Longitudinal leveling (Relative longitudinal leveling)

It is the deviations occurring on z-plan from the average vertical position (reference line) of both rails and measured by continuous measurements.

Leveling values given in Acceptance Tolerances table show the tolerances for short wavelength (D1: 1 m $< \lambda \leq$ 25 m), measurement length is 10 m.

Measurement shall be carried out for both rails.

Direction (Relative direction)

It is the deviations occurring on y-plan from the average horizontal position (reference line) of both rails and measured by continuous measurements.

Direction values given in Acceptance Tolerances table show the tolerances of short wavelength (D1: 1 m < $\lambda \leq 25$ m), measurement length is 10 m.

Measurement shall be carried out for both rails in the alignment but on the reference rail in the curve.

Torsion

It is the algebraic difference between two cants taken at a certain defined interval and generally expressed as the gradient between two measurement points.

Torsion measurements are taken either at a fixed interval simultaneously, for instance at a distance to the wheel base, or calculated from continuous cant measurements.

Absolute vertical position of the railway

It is the amount of deviation permitted at vertical from the location of the line in the project with respect to an outside reference point:

Permissible deviation from the position set out in the project is +10mm/-20mm.

Deviation between two adjacent reference points where clearance is ≥ 30 m shall not exceed 10 mm. In the event that the clearance between reference points is less than 30 m, tolerance shall be determined by the Engineer.

Absolute horizontal position of the railway

It is the amount of deviation permitted at horizontal from the location of the line in the project with respect to an outside reference point:

Permissible deviation from the project location is ± 10 mm.

Deviation between two adjacent reference points where clearance is ≥ 30 m shall not exceed 10 mm. In the event that the clearance between reference points is less than 30 m, tolerance shall be determined by the Engineer.

Location of sleepers

Clearance of sleepers may show a deviation of maximum ± 20 mm. from the clearance set forth in the project (except for weld areas and necessary situations). Inspection shall be performed at minimum every 200 m by sampling.

Deviation in the sleeper number in 1000m shall be within 0.5% of the number set forth in the project.

Fastening systems

All fastening systems should be completed and tightened by the tools having torque-meter on them in accordance with the technique.

Welds

Acceptance of weld works shall be performed in accordance with EN 14587 Norms.

5.2.18. Line geometry acceptance tolerances

Results to be obtained at the end of the inspections to be performed by the measurement vehicle shall comply with the tolerances given in the table:

Acceptance Parameters	Acceptance Tolerance	Standard deviation (at 200 m) (mm)
Rail Gauge– (mm) (project value / measured value)	±2	0,7
Cant– (mm) (project value /measured value)	±2	0,7
Longitudinal Leveling – (mm) at a measurement length of 10 m	3	1
Direction – (mm) at a measurement length of 10 m	3	0,7
Torsion - (mm/m) (calculated according to a measurement length of3m, from varying reference line)	1	

In this table, longitudinal leveling and direction values are valid for short wavelength (D1: 1 m < $\lambda \leq$ 25 m) defined in EN 13848-1.

5.3. Concrete sleepers

5.3.1. Scope of works

These specifications describe the type, technical specifications, acceptance conditions and general terms of HM Skl-14 type elastic connection, pre-stressed – pre-tensioned concrete sleeper type in accordance with 60 E1 (EN 13674-1(2003) rail to be supplied.

5.3.2. Line characteristics

Concrete sleepers to be supplied shall comply with the following characteristics.

Rail: 60 E1, 900A quality

Axle Load: 22.5 tons/axle

Maximum Speed:30km/hour

Minimum Curve Radius: 200 m.

Maximum Cant: 130 mm

Maximum Gradient: %o 12.5

Rail Settling Surface Gradient: 1/40

Rail-gauge Space: 1435 (-2, +2) mm

Ballast Thickness: minimum 30 cm below sleeper

Distance between Sleepers: 600 mm.

Rail Connection Type: Welded and fishplated

5.3.3. Manufacturing processes and technical specifications

Pre-stressed – pre-tensioned concrete sleepers shall be in mono-block type with HM Skl-14 type elastic connection in accordance with 60 E1 rail.

Concrete sleepers shall be designed and manufactured in accordance with EN 13230-2 and shall comply with EN 50125 standards. Static calculations, manufacturing process and details of the sleepers to be designed according to requirements.

The Contractor shall provide the technical specifications related to cement, aggregate, water and pre-stressed steel used in the manufacturing of pre-stressed concrete sleeper. The Engineer is authorized to inspect the specifications of relevant materials in accordance with ISO standards.

Reinforcement concrete steel shall not be used in pre-stressed concrete sleeper for reinforcement purposes.

Aggregate and cement shall comply with EN 13230-2 and inspected according to this standard.

5.3.4. Acceptance conditions

General

The Engineer has the right to observe the manufacturing, carry out any kind of examination related to the manufactured sleepers and materials to be used in sleeper manufacturing and inspect the results obtained from these examinations.

The Engineer has the right to carry out any kind of inspection to ensure that the Contractor complies with the conditions of manufacturing.

Inspection and acceptance processes of concrete sleepers shall be carried out under the supervision of the Engineer and DGII.

Submission For acceptance

Sleepers shall be submitted for acceptance in such a way that their elastic connections are pre-assembled.

Two kinds of tests shall be applied:

- Design and Manufacturing Approval test: This is a serial test conducted for demonstrating the conformity of concrete sleeper or a part of it with the design. The Contractor shall invite the Engineer to attend the production.
- Routine Acceptance Inspection tests: These are product inspection tests to be conducted under the supervision and control of the Engineer during sleeper acceptance apart from manufacturing inspection processes of the production plant. Routine tests shall be conducted on concrete sleepers chosen randomly in order to represent the pile and separately for each pile of 5.000 units.

Design and Manufacturing Approval tests are provided in these specifications: These tests shall be conducted in one of the universities, public institutions or accredited private laboratories. Routine acceptance inspection tests that are deemed to be Dimension and Strength Inspection tests shall be carried out at the sleeper production plant.

The Contractor shall prepare a report specifying the technical specifications of the concrete used in the pre-stressed concrete sleeper and present it to the Engineer. This report shall specify the specifications of aggregate (grain size curve, source, density, specific gravity, and clearance volume), technical specifications of cement (type, amount, and water factor), results of shrinking and pressure tests, vibration specifications allied (space, frequency).

Technical specifications pertaining to elastic connection components that compose the elastic connection system (spring clamp, sleeper-screw and washers, plastic fixing plug, angle guide and plastic plate pad) have been specified in TCDD's Technical Specifications and the Contractor shall submit to the Engineer the results of the tests pertaining to elastic connections used in the manufacturing of concrete sleepers during acceptance. The Engineer has the right to carry out the in order to check the technical specifications of components in the production plant or in independent laboratory.

Quality Tests

General

Tests pertaining to design and manufacturing approval in relation to the design and manufacturing approval, following tests shall be conducted;

Test samples shall be chosen under the supervision of the Engineer.

EN and ISO standards shall rule in the event of lack of provision in these specifications related to test methods and under which conditions tests shall be conducted.

A series of test is composed of following;

a) Fatigue Test (positive bending moment in rail settling site: in 1 sleeper)

b) Static Test (positive bending moment in rail settling site: in 6 sleepers) (Negative bending moment in sleeper center: in 3 sleepers)

c) Dynamic Test (positive bending moment in rail settling site: in 6 sleepers)

d) Vertical Load Test (in 3 sleepers)

e) Longitudinal Resistance Test (in 3 sleepers)

f) Electrical Resistance Test (in 3 sleepers)

g) Dimension and Workmanship Inspection (in all sleepers prepared for approval)

All of the elastic connection components apart from plastic fixing plug on the samples to be used in fatigue, static and dynamic tests shall be demounted.

Fatigue, static and dynamic tests shall be conducted on 4-6 weeks old sleepers that are kept within water for two days and under normal weather conditions for one day before the test.

Lateral resistance shall not be applied in fatigue, static and dynamic tests. Routine Acceptance Inspection Tests

Routine acceptance inspection tests are composed of a series of test stated below;

Tests shall be conducted under the supervision of the Engineer/DGII.

A series of test for each pile of 5.000 units

a) Static Test (positive moment in Rail Settling Site: in 6 sleepers)

b) Dimension and workmanship inspection

5.3.5. Fatigue test

Fatigue test on rail settling site

Test shall be conducted according to the test mechanism stated in schedule 2a and according to the process stated in schedule 2b.

Fr_u load shall be 50 kN, Fr0 load shall be 150 kN and Frr load shall be the one that is obtained after the static test and that is observed when the first crack is seen.

The sample shall be loaded until Frr load first then be subjected to 2 million cycles with 50-150 kN load in 2-5 Hz interval. Maximum crack width shall be 0.05 mm when load is lifted after cycle.

Then, loading shall be executed until the sleeper breaks apart with maximum 120 kN/minute and loading strength when sleeper is broken shall be Frb minimum 330 kN.

5.3.6. Static test

5.3.7. Static test in rail settling site

Test shall be conducted according to test mechanism stated in Schedule 2.a, according to the process stated in schedule 2c for design and manufacturing approval test and according to the process stated in schedule 2d for routine acceptance inspection test. Lr = 0,6 m.

Fr0 load shall be 150 kN. Frr load detected at the end of the test should be greater than Fr0 load.

Test shall be continued until sleeper is broken after Frr load is detected and the minimum load at the time of formation of 0.05 crack shall be Fr0,05 270 kN and the minimum load at the time the sleeper breaks apart shall be Frb 375 kN.

5.3.8. Static test at sleeper center

Test shall be conducted according to test mechanism stated in schedule 2e and according to the process stated in schedule 2f. Lc = 1,5 m.

Fcon load shall be 35 kN. Fcm load detected at the end of the test should be greater than Fcon load.

Test shall be continued until sleeper is broken after Fcm load is detected and the minimum load at the time of formation of 0.05 crack shall be Fc0,05 65 kN and the minimum load at the time the sleeper breaks apart shall be Fcb 90 kN.

5.3.9. Dynamic test

Test shall be conducted according to test mechanism stated in schedule 2a and according to the process stated in schedule 2g.

Fru load shall be 50 kN and Fr0 load shall be 150 kN.

Minimum Fr0,05 load to be obtained shall be 225 kN and minimum FrB load shall be 330 kN.

5.3.10. Vertical load test

This test shall be conducted according to EN 13481-2 Annex A and the minimum load to be applied shall be 60 kN.

5.3.11. Longitudinal resistance test

This test shall be conducted according to EN 13146-1 and the longitudinal resistance to be obtained at the end of the test shall be $F \geq 9$ kN.

5.3.12. Electrical resistance test

This test shall be conducted according to EN 13146-5 and test result shall be minimum 5 kΩ.

5.3.13. Dimension and workmanship inspection

Sleepers shall be within the dimensions and tolerances shown in the technical drawings approved by the Engineer and they shall not exceed the following tolerances.

- Shoulder width (1813,9-1814) ± 1,5
- Rail settling surface gradient (1:40) 150 mm long < ± 0,5 mm
- Rail settling surface torsion 150 mm width < 0,7 mm
- Shoulder width in rail settling site: 297,8-298 +1,5 mm – 0,5 mm
- Sleeper base length: (2600) ± 10 mm
- Sleeper base width: (300) -5mm + 5 mm
- Line gauge: (1435) -2mm + 2 mm

Sleeper height in rail settling site (at the centre): (215) ± 2 mm Sleeper shall be clean, free of cracks and feature smooth surfaces.

Lower surface of the sleeper shall be rough and uniform and there shall not be the traces of laitance.

There shall not be peeling in sleepers.

The surface, on which the plastic plate bad shall settle, shall be smooth and flat and there shall not be air pockets.

Dimension and workmanship inspection of sleepers shall be conducted by using Wald diagram given in Schedule 3 for each pile. In the event that the sleepers submitted for acceptance are rejected according to Wald diagram, the contractor shall be able to resubmit the pile for acceptance by eliminating the faulty sleepers. The pile shall be rejected or accepted as a result of the dimension and workmanship inspection to be conducted according to Wald diagram.

5.3.14. Results to be obtained from tests

In the event that samples do not meet the desired specifications in a test conducted in relation to approval tests for design and manufacturing, samples shall be taken for the 2nd time under the same conditions as pertaining to the tests that produced negative results and the negative tests shall be repeated. In the event that positive results can not be obtained from the samples taken for 2nd time, all of the tests pertaining to design and approval tests shall be repeated and in the event that any of these tests renders a negative result, the same procedure shall be repeated, and in the event that all results are positive then manufacturing approval shall be given to the Contractor.

In the event that samples do not meet the desired specifications in a test conducted in relation to routine acceptance inspection tests, samples shall be taken for the 2nd time under the same conditions and tests shall be repeated. In the event that expected results can not be obtained in any of these tests, the pile shall be rejected. In the event that positive results can not be obtained from the samples taken for 2nd time, all of the tests pertaining to routine acceptance inspection tests shall be repeated and in the event that any of these tests renders a negative result, the same procedure shall be repeated and in the event that all results are positive then manufacturing approval shall be given to the Contractor.

5.3.15. General terms

Marking

Manufacturing year, ERA's name "DGII" and manufacturer symbols shall be stamped on the sleepers in a depth of at least 2 mm in accordance with the drawing in Schedule 1a.

ERA's name "DGII" on pre-stressed concrete sleepers that are rejected during acceptance shall be removed.

Pilling on production plant site

Concrete sleepers shall be piled on a ground that doesn't pose settling risk.

Piling woods (timber) in the dimension of 8 x 10 cm shall be placed abreast vertically and between the sleepers in such a way not to pose any bending moment effect on sleepers.

Warranty

Elastic connection pre-stressed concrete sleepers shall be warranted for 5 years for connection materials and concrete sleepers starting from the date of accepting the last lot against all faults arising out of manufacturing during storage and utilization. The connection components and concrete sleepers that become corrupted due to manufacturing faults within warranty period shall be replaced within 30 days.

Final inspection

DGII shall carry out the final inspections (eye and gauge inspection) of concrete sleepers in place of delivery in Turkey. Even though DGII have had relevant tests conducted in the sleeper production plant for both concrete sleepers and connection components, DGII reserves the right to have the tests done by an institution in the event it finds necessary. The components found to be faulty at the end of inspections and tests shall be rejected.

Gauges

The Contractor shall submit to the approval of the Engineer technical drawing specifying the maximum and minimum tolerances belonging to the gauges to be used in the inspection of dimension of concrete sleepers before manufacturing.

Gauges shall be manufactured according to approved technical drawings and they shall be abrasion resistant and conformity of these gauges with the technical drawings shall be approved by the Engineer and then used in inspection process.

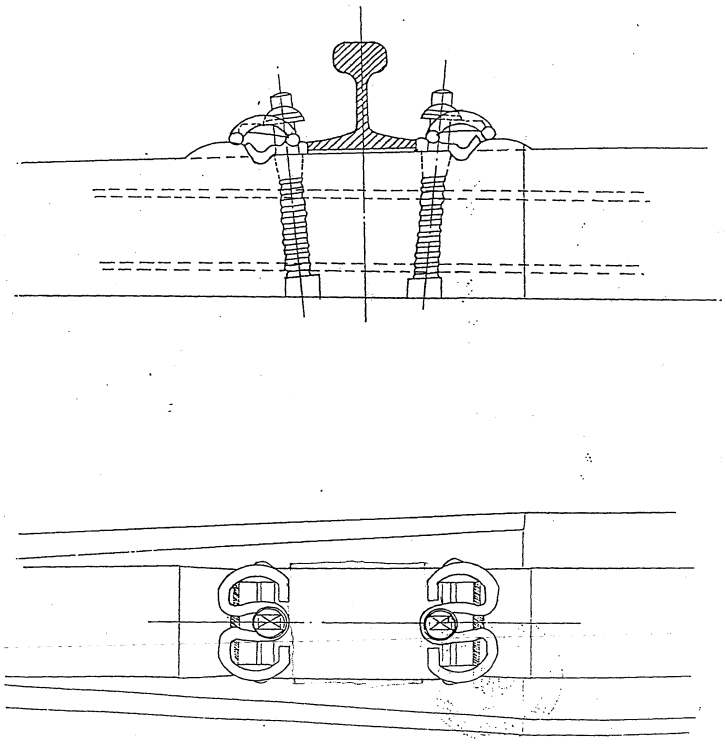

SCHEDULE: 1 Pre-assembled connection and sleeper marking

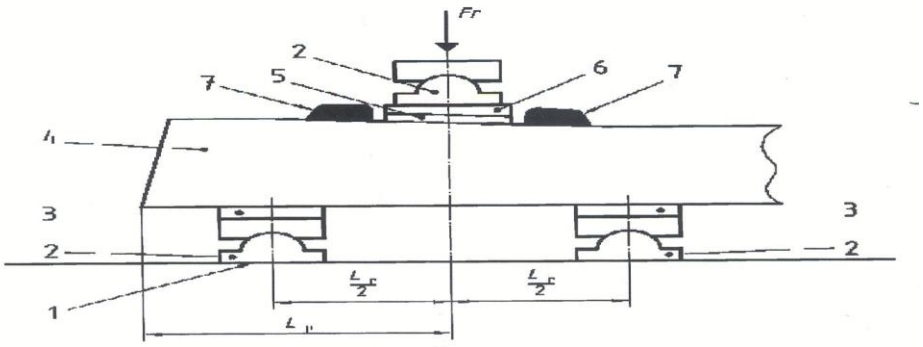

Key

1 Rigid support
2 Articulated support (see annex A for details)
3 Resilient pad (see annex A for details)
4 Prestressed monobloc sleeper
5 Standard rail pad as defined by the purchaser
6 Tapered packing (see annex A for details)
7 Lateral stop

Schedule: 2-a. Static, dynamic and fatigue test mechanism in rail settling site

The fatigue test procedure at the rail seat section is shown in Figure 6.

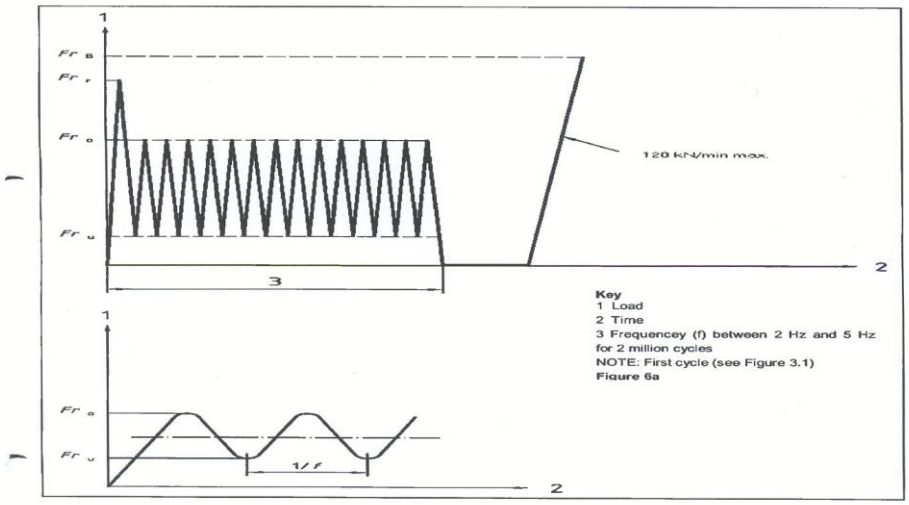

Key
1 Load
2 Time
3 Frequencey (f) between 2 Hz and 5 Hz for 2 million cycles
NOTE: First cycle (see Figure 3.1)
Figure 6a

Key
1 Load
2 Time
NOTE Typical cycle
Figure 6b

Schedule: 2-b. Fatigue test process in rail settling site

The static test procedure at the rail seat section for the design approval test and routine test is shown in Figures 3.1 and 3.2.

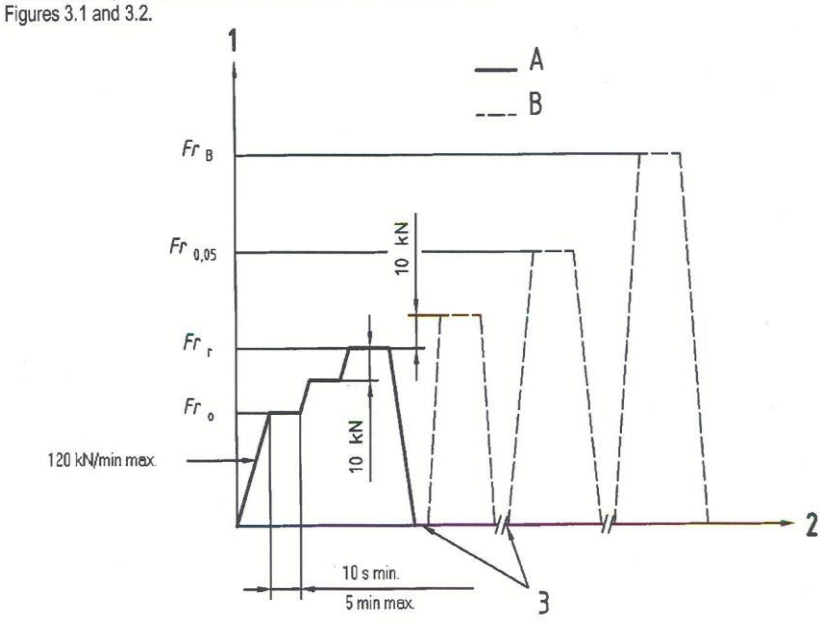

Key
1 Load
2 Time
3 Crack checking
A Required part of test
B Optional part of test

Schedule: 2-c. Static test process in rail settling site (Design and Manufacturing approval test)

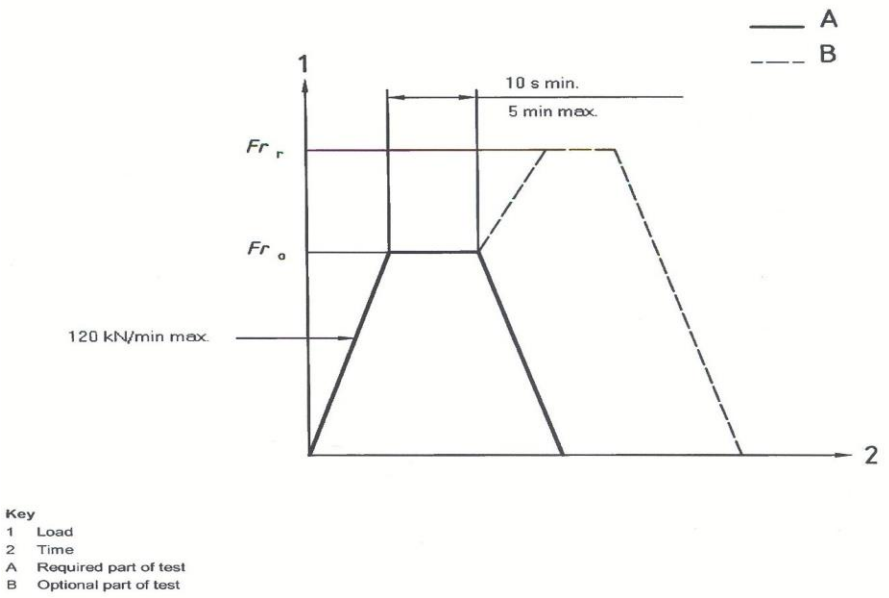

Key
1 Load
2 Time
A Required part of test
B Optional part of test

Schedule: 2-d. Static test process in rail settling site (Routine acceptance inspection test)

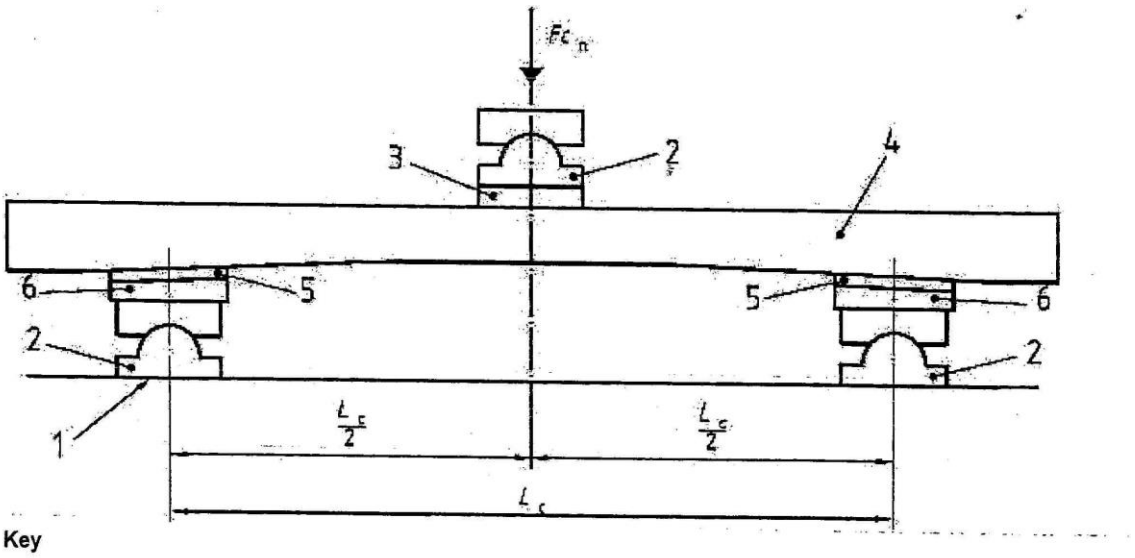

Key

1 Rigid support
2 Articulated support (see annex A for details)
3 Resilient pad (see annex A for details)
4 Prestressed monobloc sleeper
5 Standard rail pad as defined by the purchaser
6 Tapered packing (see annex A for details)

Schedule: 2-e. Static test mechanism in sleeper center

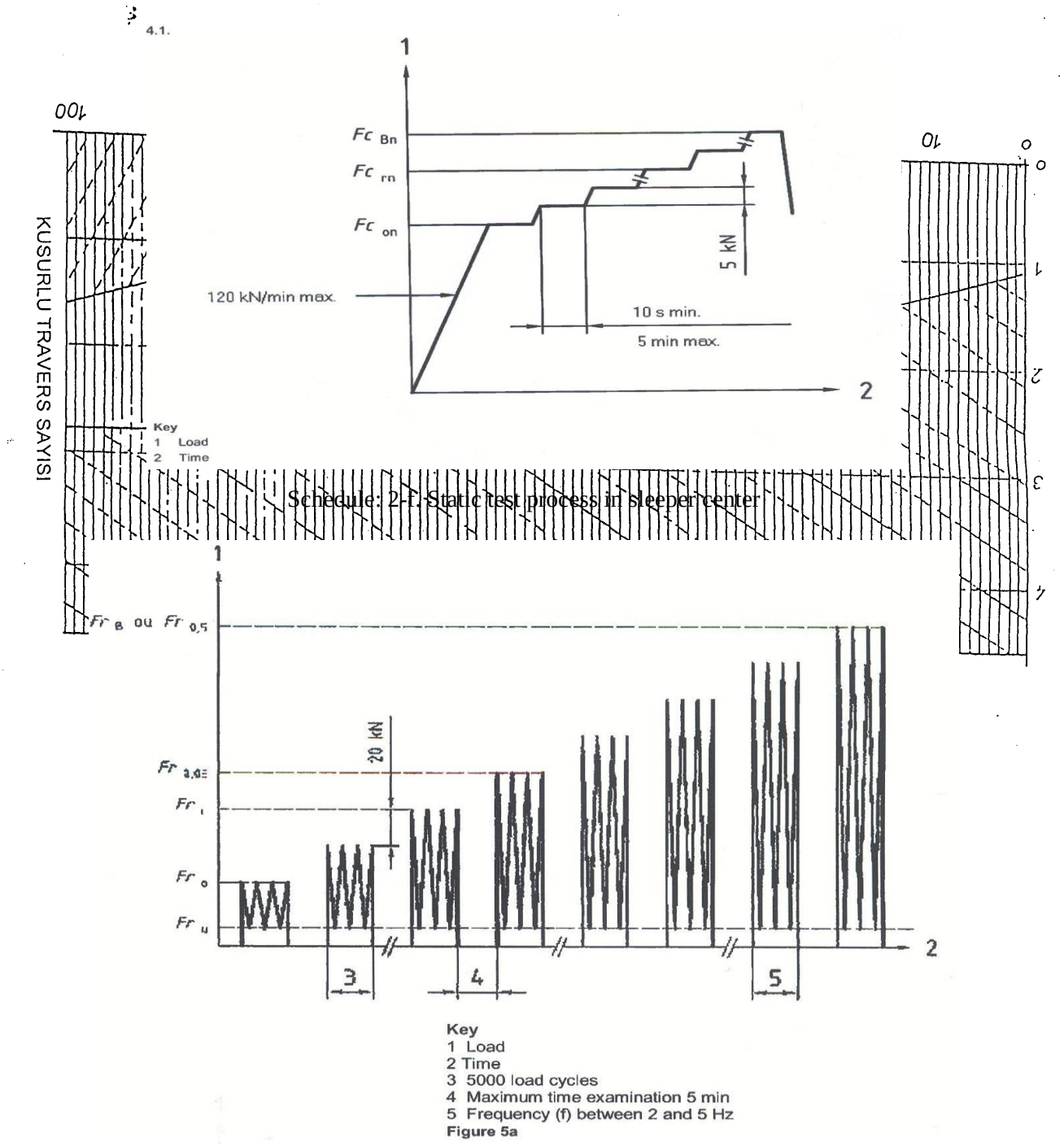

Key
1 Load
2 Time
3 5000 load cycles
4 Maximum time examination 5 min
5 Frequency (f) between 2 and 5 Hz
Figure 5a

Schedule: 2-f. Static test process in sleeper center

Schedule: 2-g. Dynamic test process in rail settling site

5.4. Ballasts

5.4.1. Introduction

These specifications specify the type and acceptance conditions of the ballast that Contractor shall use for the project.

5.4.2. Geological specifications

Ballast should be manufactured from the same rock broken off the bedrock in order to be manufactured from magmatic origin basalt granodiorite, gabbro and diabase rocks or should be crushed in stone crusher with the aim that block rocks suitable for ballast manufacturing are angled.

5.4.3. Geotechnical specifications

Limitations of Mechanical Specifications

Abrasion loss

Abrasion loss is obtained by Los Angeles test method 1000.000 ± 100 gr. Sample 5.000 ± 50 gr 31,5/40 mm 1000 revolutions 12balls 1.6 mm screen Los Angeles abrasion value can be equal to 15% or can not be less at the end of 1000 cycles.

Geometric Specifications

Sieve Analysis

Sieve analysis should be within the following limits.

* Sieve Size (mm)	% Passing
60	100
50	70-99
40	30-65
31.5	1-20
22.4	0-3

Ballast aggregate to be manufactured should be between 31.5 – 50 mm in the following gradation interval and the remaining substance amount should be at least 50%.

Fine and dust (very fine) materials

Fine material should be the one passing through 0.5 mm. It shouldn't pass 0.6% of total material in the quarry and 1% in construction site.

Dust (very fine) material is the one passing through 0.063 mm screen. Amount of material passing through this screen shouldn't exceed 0.5%.

Above-mentioned percentages are the proportion to be applied to the whole sample of the material.

These limits should be tested without taking the material to the construction site.

In the event that the manufactured ballast is contaminated due to manufacturing and environmental factors because of keeping them waiting in the storage site, the Contractor undertakes to bring the stored ballast to the quality that it can be provided to the line.

Flatness Index - tested as per EN 933-3. Flat material shouldn't exceed 20% of total sample.

Shape Index - tested as per EN 933-4. Lengths of the particles bigger than 20 mm shouldn't exceed 25% of total sample.

Limitations in thermal degradation specifications

Density and water absorption test

Performed in accordance with EN 1097-6.

Sample materials are composed of 10 units of rocks whose approximate weights are 150-300 g between 40-50 mm or 50-63 mm.

At the end of water absorption test, they should be equal to 1.5% or less.

Magnesium sulfate resistance test (Frost test)

This test shall be performed in accordance with EN 1367-2 standard. Following amendments should be done to render this standard suitable for ballast material.

Sieves 22.5 mm – 31.5 mm – 50 mm

Scale 20 kg capacity 1 g sensitivity

Container: Dimension of the container

Wall thickness: 4 m

Height: 260 mm

Diameter: 230 mm Solution: 12lt/test

Material sample: Two samples as 10.000 kg ± 100 g

31.5 mm – 40 mm	5000 g ± 50 g
40 mm – 50 mm	5000 g ± 50 g

10 cycles

Sieve 22.4 mm

Weight loss shouldn't exceed 5% at the end of 10 cycles according to magnesium sulfate test.

5.4.4. General provisions

Determination of the suitability of the quarry for ballast manufacturing

After the quarry face is opened in such a way to represent the quarry completely, 100 kg sample shall be taken and crushed in the dimension of the ballast aggregate, this sample should meet the required physical specifications.

General structure of the quarry should comply with the ballast aggregate and it should not contain intensely developed breaks, cracks and crushing zones.

Moreover, petrographic analysis and chemical analysis shall be conducted in order to first determine the name of the rock and define the minerals within the rock by relevant public institution approved. At the end of the name defining process, only basalt, granodiorite, gabbro and diabase rocks shall be accepted.

Suitability of control sample during production

On the first 5000 m3 ballast sample that shall be taken from the production line and that shall be submitted for acceptance with the aim of determining whether ballast aggregate to be manufactured is in accordance with the quality, the Engineer along with DGII shall conduct Gradation, Los Angeles Abrasion Loss, Frost Loss, Harmful Components, Water Absorption tests.

For the subsequent purchases, Gradation, Los Angeles Abrasion Loss, Harmful Components, Water Absorption tests shall be repeated at each 5000 m3 and multiples of 5000 m3 and Frost Loss tests at each 10.000 m3 and multiples of 10.000 m3. It shall be inspected whether test results meet the acceptable values and ballast samples shall be taken from the production line.

5.5. Switches

These specifications specify the quality and production requirements of the materials used in the manufacture of 60 E1 Railed R=300 1/9, R= 500 1/12 fixed and R=1200 1/18.5 and R = 1500 1/24 moving manganese core and concrete sleeper switches which DGII's acceptance requirements of the subject switches.

5.5.1. Technical requirements

General

Switch Technical Specifications

Rail profile	: 60 E160,210 kg/m
Tongue Rail	: 60 E1 A1, 72,97 kg/m
Counter-rail Profile	: U profile 900 A quality (C1 EN 13674-2)
Line gauge	: 1435 mm
Sleepers	: Concrete Sleeper

Axle Load : Maximum 22,5 ton

Manganese casting central block: Moving UIC 866 or 12-14% Mn

Maximum speed on straight line : 30 km/h

Distance between sleepers in the area of Switch Engine: Variable

Sleeper layout of switches on the curve shall be "fan-shaped".

All rail joints should be blind or suitable for subsequent insulation joint or welding operations. Joints shall be arranged in such a way to be between two sleepers.

Sleepers are not allowed to contact each other at double sleeper, short sleeper and sleeper heads. Furthermore, distance between rail axis and sleeper head shall be minimum 500 mm.

Switch tongue mechanism

Switch Tongue shall be manufactured as elastic tongue. Switch Tongue mechanism is composed of an elastic Tongue, a reclining rail and Tongue bearings assembled to it. Heating is ensured by assembling electric heating coil in spaces allocated.

Switch Tongue reclining rail shall be manufactured from standard rail profile and be processed properly in the reclining side of the Tongue.

Measures necessary for keeping the relative sliding between Switch Tongue rails and reclining rails within limits shall be taken (Heel block shall be made in such a way to tolerate such a sliding).

Reclining rail and elastic Switch Tongue shall be drilled as necessary for installing adjustment safety and control mechanism.

Switch tongue rail profile

Main manufacturing material is 60 E1 A1 72,97 kg/m 900 A. Glaze area of the section rounded by forging shall undergo heat treatment to prevent notch formation.

Simple central block core made of Manganese Hard Steel "MN 13":

The whole central block section of the switch core (switch end and wing rails) shall be casted as a single piece from manganese hard steel whose ends are fixed to connection rails, processed and welded. Connection rails made of standard rail from four ends are welded by electric welding.

Material quality

Central block Cast Manganese Steel, 12-14% Mn according to UIC 866

Contra-rail

Contra-rail to be manufactured from 900 A quality U profile shall be assembled to girders and increased 20 mm towards rail upper edges. Manufacturing material quality is 900 A rail steel in conformity with UIC 860.

Rail connection

In order to attach rails and construction parts to sleepers, ribbed plate pads and SKL 12 tie clamps shall be used.

roller bearings shall be used as facing second sleepers on the right and left side of the box sleeper where point machines are located in Switch Tongue area to ensure easy movement of the Switch Tongue on sliding fishplates. For the point machines located in Switch Tongue end, a roller bearing which is facing a sleeper shall be used.

In ribbed plate pads, plate pad width and hole sections shall be able to be used and the same sets of a switch shall be able to be used in concrete sleeper (with 4 holes).

Double washers, hook bolts and ULS 6 washers shall be used in sleeper screws.

Plastic intermediate plate pads which are in compliance with UIC 864-5, have a thickness of 6 mm and have shoulders on sides shall be placed between ribbed plate pad and rail base.

Manufacturing material quality

Ribbed plate pad: Profile ribbed plate pads milled in accordance with S 275JR EN 10025 or cast ribbed plate pads in compliance with DIN 1683 shall be used.

Plate pad: 20 mm thick, in accordance with UIC 864-7, 160 mm wide.

Hook bolts: M22, Material class in accordance with 5.6 EN 20898.

Sleeper-screw: Material class in accordance with 5.6 EN 20898

Plastic pad: ELASTOMER UIC 864-5

Washer: UIC 864-3

5.5.2. Lock mechanism

There shall be at least three lock mechanisms in the Switch Tongue section and at least two lock mechanisms in the core section of the switch. The Switch Tongues, when pushed down to the reclining rail, shall make all machined surfaces to assemble and properly distribute the loads on the reclining rail. Besides, they shall provide and maintain a 163 ±5 mm space at the end of the unlocked Switch Tongue; the dimension between the Switch Tongue rail and the reclining rail shall be minimum 58 mm.

U type box sleeper prepared shall be used for assembling the point machine and it shall ensure the easy movement of locking device and point machine control rods. In accordance with other sleepers, these sleepers to be used shall not pose an obstacle for load distribution and tamping.

Lock mechanism should allow a length slide of up to ± 35 mm between the Switch Tongue rail and reclining rail for the switches of 1.500 m and 500 m deviation radius.

Locked switch Switch Tongue should be locked in a secure manner and the unlocked Switch Tongue should be kept in position by means of the lock while being pushed down to the reclining rail elastically. The lock should be able to be pre-assembled and assembled and the whole should be able to be simply disassembled without need for any mechanical fit.

Switch Regulation System:

It shall be performed by means of hydraulic drive point machines, whose technical characteristics are given in Signaling Technical Specifications.

5.5.3. Switch concrete sleepers

They shall be made of pre-stressed concrete and formed according to an axle pressure of min 22,5 t. Their layout in switches shall be as 600 □25 mm in average. Connection of sleepers and plate pads shall be screw-type.

Even though the switch is completed, sleepers necessary for the section up to the transition to regular line sleeper shall be given with connectors by the Contractor together with switches.

Appropriate transition sleepers shall be used for the gradual equalization of tension loads coming to the ballast and appropriate sleeper dimensions and sections in the transition areas at the beginning and end of switch.

Surface condition

Sleeper surfaces should be free of cracks and have a small amount of pores. Poorly patched spaces, bad surfaces and larger holes are not allowable. Irregularities at the lower edges which affect traffic are not allowed. Surface should not be flaky and pores should not be deeper than 1 cm.

Performing repair works on the surfaces of prefabricated parts is not allowable.

Moment ratings for the tests compliant with DIN EN 13230-2 (main line sleepers) and DIN EN 13230-4 (Switch Sleepers):

Main Line Sleepers

Positive moment under rail bearing, Lr = 0,6 m(Mdr) and negative moment at the center of the sleeper (Mdcn)

Sleeper Type	**Mdr(kNm)**	**Mdcn**
B – 70	**22**	**15**

Switch sleepers

Dynamic load safety coefficient shall be taken as 2,2 Static load safety coefficient shall be taken as 2,5.

Positive Moment (M) , Negative Moment (Mn)

Switch Sleepers	**M (kNm)**	**Mn (kNm)**
	28	**30**

Qualification tests / Approval criteria

- On the rail chair, positive bending moment static test, one rail bearing for each sleeper, on 5 sleepers
- On the rail chair, positive bending moment static test, one rail bearing for each sleeper, on 3 sleepers
- On the rail chair, positive bending moment fatigue, 2 million load conversions on one sleeper
- At the sleeper centre, negative bending moment static test, on 3 sleepers Tests necessary for main line sleepers in compliance with DIN EN 13230 -4

Static test positive bending moment 1 sleeper, following fatigue test on the same sleeper

Static test negative bending moment 1 sleeper, following fatigue test on the same sleeper

Bending tests are performed only on ≤ 3,5 sleepers and it is conducted by W superstructure. It is not carried out under the gusset.

Testing Powers for The Main Line Sleepers

Fro under the rail bearing (positive bending moment Lr = 0,6 m)

FCon at the sleeper center (negative bending moment)

Sleeper type	Fro (kN)	Sleeper Center F Con (kN)
B 70	176	43

- Soaking for 7 days for quality tests (Sleeper of 7 days)
- Soaking for 2 days for approval tests (Sleeper of 4-6 weeks)

Testing powers for switch sleepers

Fbo (Positive bending moment) Fbon (Negative bending moment)

Switch Sleeper	**Fbo(kN)**	**Fbon (kN)**
Conventional superstructure	80	86

- Soaking for 7 days for quality tests (Sleeper of 7 days)
- Soaking for 2 days for approval tests (Sleeper of 4-6 weeks)

The Contractor shall provide the Engineer with detailed information about the production system of the concrete sleeper they shall use. Concrete sleepers shall be designed as HM SKL 12 type elastic connection pre-tensioning – pre-shrinking and according to 22,5 tons axle pressure.

Electric isolation resistance value of concrete sleepers shall be min. 5 k.

The Contractor shall present to the Engineer design and production approval test reports of the concrete sleepers to be used in switches.

Application of bending tests

Test installation shall be executed as defined in DIN EN 13230-2:2002 and DIN EN 13230-4:2002. At least one main line sleeper and one switch sleeper should be alternately taken from each shift ever week and undergo a bending test as per DIN EN 13230.

5.5.4. Marking

All markings which may be necessary during switch assembly shall be conducted by metal plates (on rails).

Tolerances

If the tolerances specified in the technical delivery requirements and drawings for dimensions manufactured by being machined, ISO 2768 General Tolerances apply.

5.5.5. Forged products

Die-Forged parts

Permissible deviations for tolerances and die-forged parts shall be in accordance with DIN 7526 / Forging quality F, in compliance with the final valid text.

Cast parts

Cast rough parts shall be cast steel in compliance with DIN 1683, degree of accuracy GTB 16/5

Manganese hard cast steel for core parts shall be in compliance with DIN 1783, degree of accuracy GTB 16/5.

5.5.6. Technical delivery requirements

Grinding depth shall be maximum 0,5 mm for at least 1000 folds length of the remoulding depth.

Opposite edge:

Grinding depth shall be maximum 1 mm for at least 250 folds length of the remolding depth

Rounding of Switch Tongues by forging and Welding Tongues to the standard rail:

The following requirements should be fulfilled for the Switch Tongue rail section, Switch Tongues rounded to standard rail profile by forging and welded to the standard rail as well as switch parts to be manufactured from rail profile.

Forming butt-weld joints:

Weld leakage in the butt-weld seam should be removed by a chisel from each direction and be ground. Sharp edges which may occur during machining or treating of the forge rounding or weld joint shall be rounded with a radius of approximately 2 mm.

Waviness on the transition surface or transition edge:

Waviness on the transition surface or transition edge in the butt-weld joint area should not exceed 0,5 mm at a measurement length of 1500 mm. Waviness measurement shall be performed by means of a 1500 mm ruler and clearance gauge.

Waviness on the rail:

Waviness of the rail surface in the weld joint area shall not exceed 0,5 mm.

Height for Switch Tongue rounding by forging:

Height for Switch Tongue rounding by forging is measured from the surface of the adjacent standard rail profile plate pad. Permissible difference may be +/- 1,5 mm to theoretical dimensions.

Missing material in rail heads and fishplate holes:

Lack of materials which may occur in the rounding area due to thermal effects during pressing operation and the rolling tolerances of the Switch Tongue profile should not exceed the following limit values.

Lateral creep of the rail head:

Not allowed at transition edge. Maximum 2,0 mm on impact side.

A cross-sectional area reduction of 1,5 mm in the butt-weld joint area is permissible.

Switch tongue torsion

There may be a torsion of 100 mm in the Switch Tongue and of max 0,5 mm in the width. Basically Switch Tongue footing is taken for measurement at 1000 mm after the start of Switch Tongue; measurement point in Switch Tongue profile is the area just before rounding by forging and in standard rail profile is just after the weld joint.

Switch tongue bearing on the reclining rail:

The Switch Tongue mechanism, when locked, should completely fit on the reclining rail by minimum 2/3 of the Switch Tongue planning site. Max 0,5 mm tolerance is permissible.

Switch tongue base on the sliding bearing

Switch Tongue should lie on the sliding bearing from end to end as far as possible. Maximum 1 mm tolerance is permissible between the Switch Tongue and the sliding bearing. This tolerance applies in the controls on the assembly beam. Maximum 2,5 tolerance is permissible between the Switch Tongue and the sliding bearings individually.

Propagation expansion dimensions

+/- 2 mm tolerance applies for the propagation expansion at the end of the Switch Tongue mechanism.

Switch tongue bearing layout

Switch Tongue bearings should not recline on the opposite side surface from top and bottom. In order to ensure that the Switch Tongue leans on the reclining rail properly, (0,5≤X 1.5) mm tolerance should not be exceeded in the narrowest place between the Switch Tongue and the Switch Tongue bearing.

Right angled status of reclining rails at the start of the switch tongue mechanism

Right-angled status of reclining rails has ± 2 mm tolerance. Measurement is performed by an appropriate jaw square reclining on the reclining rail head. Bearing edge length should be 600 mm.

Line clearance

Line clearance tolerances are ± 2 mm. Measurement is performed by an appropriate rail distance measurement gauge at the start, center and end of the Switch Tongue mechanism on both transition arm.

Narrowest passage

The narrowest passage is the minimum clearance between the reclining rail and the Switch Tongue. It should be minimum 58 mm.

Contact of the switch tongue to the reclining rail in the bolted lock

Maximum 0,5 tolerance is permissible in the lock site.

Chamfer width

Front going	+ 1,5 – 0,5 mm
Parallel chamfer	+ 1,0 – 0,5 mm
Back going	+ 1,5 – 1,0 mm
Stopping clearance	+ 2,0 – 2,0 mm

The measurement of the above given points shall be performed with the help of a bolt gauge or template.

Uniformity on the Core End and Wing Rails

Rail upper edge of the wing rails is taken as the base for measurement. Core end may be maximum 1,0 mm higher or 0,5 mm lower than the rail upper edge of the wing rails out of the drawdown site.

Clearance in the Contra-rail

Clearance between the contra-rail and the transition edge opposite of it is calculated by arithmetically deducting the rib clearance from the line clearance. Tolerances for expansion shall be taken from the relevant drawings (guide value ± 1,5 mm)

Distance between Plate Pads

Tolerances of the distance between plate pads are generally ± 2 mm according to theoretical measure. Accurate and real position of the plates shall be indicated by marking with a colorful paint on the external transition rails.

5.5.7. Acceptance conditions

Drawings and documentation

The Contractor shall present the maintenance instructions, assembly instructions and all drawings necessary for the maintenance and assembly of the switches and laying them according to exposure plan before manufacturing.

Drawings of exposure plans, part layouts, Switch Tongue mechanism drawings, lock mechanism drawings, frog part drawings, section drawings of the Switch Tongue mechanism and contra-rails and others shall be submitted for approval to the Engineer/DGII before manufacturing.

Drawings and documentation control

Drawings to be presented for approval before manufacturing shall be checked by the Engineer/DGII. For acceptance, the dimensions and tolerances specified in these drawings shall be taken into consideration. Corrections shall be made by the Contractor on the drawings which are found not being in conformity.

5.5.8. Controls at the beginning and during manufacturing

The Engineer has the right to follow up production method, check the conformity of the materials used in switch manufacturing with the specifications, and participates in all tests and to control the results obtained from these tests.

Control of manufactured switch

In the event of supplying the concrete sleepers of switches from Turkey, the Contractor shall bring the concrete sleepers of 1 right and 1 left switch to the production plant site, rail components shall be assembled to these concrete sleepers for each lot delivery. The manufacturer shall be responsible for rail components and concrete sleepers.

For each lot delivery, 1 right and 1left switch shall be presented as fully-assembled under the control of the Engineer. For the remaining switches, a certificate of conformity to the specifications shall be submitted.

5.5.9. Final control

DGII has the right to subject switches to a final control.

5.5.10. Loading and shipment

Switches should be sent as fully-assembled as possible. It shall be determined by mutual agreement during order in accordance with the scope of the order. Each shipment unit should be equipped with loading certificates that are package, number, quantity, explanation, dimensions, weight and package drawing.

5.5.11. Guarantees

The Contractor shall guarantee the switches it has manufactured for 4 years as of the final lot acceptance date against any manufacturing defects and defects which cannot be detected during acceptance.

The Contractor shall replace the complete switches or switch parts and concrete sleepers which have been taken off.

5.6. Elastic connection system elements (HM – W14)

5.6.1. Scope of works

These specifications specify the type, technical properties, acceptance conditions and general conditions of tension clamps, plastic angle guides, elastic rail plate pads, sleeper-screws and plastic bolts which compose W14 type rail connection system to be supplied and installed by the Contractor.

5.6.2. Type and quantity

HM (W 14) connection system produced in accordance with these technical specifications comprise of (1 set; 4 tension clamps, 4 plastic angle guides, 4 sleeper-screw, 4 plastic bolts and 2 elastic rail plate pads).

5.6.3. General characteristics of the connection system

Elastic rail fastening systems shall be used on the lines having the below given characteristics:

Rail	60 E1, 900A quality
Axle load	22,5 ton/axle
Maximum speed	30 km/hour
Rail bearing surface gradient	1/40
Rail gauge space	1435 (-2, +2) mm
Gradation and depth of ballast	30-60 mm, depth below sleeper 30 cm
Distance between sleepers	600 mm.
Rail Connection Type	Welded or Fishplate
Sleeper	Prestressed concrete

The system shall be suitable for pre-assembly in the production plant.

The system shall be assembled to the track without rotating the clamp but by pushing to the rail from pre-assembly status. Connectors should be replaceable.

No lateral load shall be put on sleeper-screws.

The system shall have protection against tilting/rotating rail and overload of tension elements.

Rail gauge space shall not exceed 6 mm in permanent loading tests performed in ambient temperature.

Connection system should be electrically insulated without an additional insulation part. As a result of the test to be conducted in accordance with EN 13146-5, R33 value to be obtained for the connection system should be minimum 5 kΩ.

On each rail, +/-5 mm. lateral adjustment should be possible. It is preferable to carry out the adjustment as 2.5 mm steps.

5.6.4. Characteristics of the elements composing hm connection system

SKL 14 Tension Clamp

SKL 14 tension clamps shall be made of alloyed tension steel having the below given chemical composition in accordance with DIN EN 10089 or its equivalent:

- C: % 0.35 - % 0.42
- Si: % 1.5 - % 1.8
- Mn: % 0.5 - % 0.8
- S: max. % 0.025
- P: max. % 0.025

Heat treatment shall be carried out in a way that clamp surface hardness shall meet 400-460 Vickers 30.

Clamps assembled to the rail should provide min. 2*10 kN = 20 kN delivery force on the rail base in case of tension elasticity of minimum 12 mm.

In dynamic tests, rail contact areas of clamps should be resistant to 6.000.000 load variation at a wavelength of 2 mm by taking over full wheel force.

For one set connection, longitudinal resistance of the rail should be at least 9 kN.

Clamps shall be coated with bituminous or an equivalent coating material in a way to prevent corrosion.

Tension clamps produced shall be free of all kinds of manufacturing defects and materials shall not have any fractures, cracks, bruises, burrs and other matters.

Plastic angle guide

Angle guides shall be made of synthetic material resistant to deformation which may occur due to radiation and reinforced with 30% glass fiber.

Material shall have the following properties:

- Density : 1.35 – 1.45 gr/cm3
- Impact resistance: > 40 Kj/m2 (Test shall be performed on 10x10x110 mm test part.)
- Indent impact resistance : > 6 Kj/m2
- Humidity rate (after being treated): 1-2,5%

Angle guides shall be produced in accordance with the dimensions and tolerances given in the attached technical drawing.

Elastic rail plate pad

Elastic plate pads shall be produced in accordance with UIC 864-5. Plate pads shall be made of rubber, polyurethane, EPDM, TPU, TPE and similar raw materials.

Elastic plate pads shall have the below specified technical properties:

Static elasticity: 50 - 70 kN/mm (shall be measured as secant elasticity between 18 and 68 kN)

Electrical resistance: 2*108 ohm*cm

Material shall be made resistant to oxidation and corrosion by adding an appropriate protective material. These additional materials shall be homogenously dispersed within the product.

No recycled material (defective and damaged plate pad, etc.) shall be used in the production of elastic plate pads.

Plate pads shall have flat edges and smooth surfaces. Plate pads shall not have mould defects. No residue, unmelted plastic material, external material shall be present in the internal structure of plate pads.

Elastic plate pads to be produced shall have the dimensions and tolerances conforming to the picture given in the annex of these specifications.

Sleeper-Screw

The material to be used in the production of sleeper-screws shall meet the following mechanical properties:

- Tensile strength: min 500 N/mm2
- Elasticity limit : min. 300 N/mm2
- Strain after fracture: min. 20%

Sleeper-screws shall be manufactured from an unwelded and complete part in accordance with the dimensions and tolerances given in the attached picture.

Sleeper-screw heads shall be manufactured by hot forging.

Sleeper-screw heads shall be manufactured by hot crumbling and thread pitches shall be proper and complete. Thread dimensions shall be in conformity with the dimensions and tolerances given in the picture.

Sleeper-screw heads and bodies shall be in the same axis and no axial dislocation shall occur in sleeper-screws due to threading.

Surfaces of the finished sleeper-screws should be smoothed appropriately. Smoothing operation should not give rise to any metal tear or roughness on sleeper-screw contact surfaces.

There shall be a feeding washer in conformity with the picture given in the annex under the sleeper-screw head.

Feeding washer shall be manufactured from a material having 590-740 N/mm2 tensile strength and its surface shall be phosphatized.

During storing, all sleeper-screw surfaces shall have been coated with an anti-oxidation material against oxidation.

Plastic bolt

Plastic bolts shall be made of Polyamide PA 6 or Polyamide Pa 6 6 material having the following properties.

- Biomid 6 6
- Econly 6 FL Nero

- Miramid RH 3C

Materials other than the stated ones shall not be accepted.

Materials remaining from moulds during bolt manufacturing and defective and faulty parts shall not be reused in bolt manufacturing.

Bolts shall have the following physical values:

- Density : 1,10 – 1,15 gr/cm3
- Volume resistance: 2x 108 Ohmxm

5.6.5. Acceptance conditions

General

The Engineer and DGII have the right to follow production, participate in all tests regarding the materials to be used in the produced fastening systems or in the production of fastening systems and to inspect the results obtained from these tests.

The Engineer has the right to carry out all necessary inspections ensuring the conformity of production.

The Contractor shall inform that HM type elastic fastening systems it produced are ready for acceptance tests and inspections at least 15 in advance.

The Contractor shall put the equipment and personnel necessary for preparing test parts and tests under the order of the Engineer. If the Contractor shall not be able to perform tests in its workshop, tests shall be conducted in the university or other independent laboratory.

Test samples shall be selected and stamped under the supervision of the Engineer.

Tests and inspections to be performed during acceptance for each fastening system and the results expected from these tests and inspections are stated in the relevant section.

It is essential that tests and inspections shall be carried out in the production plant. In the event, however, that tests and inspections cannot be in its production plant, they shall be conducted in the university or independent laboratory.

EN and ISO standards shall apply for the matters not stated in these specifications regarding test methods and the conditions under which tests shall be performed.

Characteristics of tests

Two types of tests shall be performed:

Connector performance evaluation tests **-** A series of tests to be performed only for once in order to evaluate the performance of materials together with concrete sleeper.

Acceptance inspection tests **-** Product inspection tests to be performed under the supervision of the Engineer during the acceptance of fastening systems except for the production inspection processes of the production plant.

Connector performance evaluation tests

Hoist test, (on 3 rail settlement areas)

Test shall be performed in accordance with EN 13481-2 Annex A and the load to be applied shall be minimum 60 kN.

Longitudinal Rail Resistance Test, (on 3 rail settlement areas)

Test shall be performed in accordance with EN 13146-1 and the longitudinal resistance to be obtained at the end of the test shall be $F \geq 9$ kN.

Clamping force (on 3 rail settlement areas)

Test shall be performed in accordance with EN 13146-7 and test result shall be minimum 2*10=20 kN.

Permanent Load Effect (on 1 sleeper)

Test shall be performed in accordance with EN 13146 – 4 and test results shall be in compliance with 13481 - 2 to 5.4 th article.

Permissible change in performance before and after permanent loading test should meet the following value in accordance with 13482-2;

Test	Permissible change in performance
Longitudinal rail resistance F (kN)	≤20%
Clamping force Po (kN)	≤20%
Vertical stiffness K (kN/mm)	≤25%

Electrical Resistance Test, (on 3 sleepers)

Test shall be performed in accordance with EN 13146-5 and test result shall be minimum 5 kΩ.

Determining the amount of impact load decrease (on 1 sleeper)

Test shall be performed in accordance with one of the methods stated in EN 13146 – 3. Test result should provide the value of $15\% \leq a \leq 30\%$.

Results to be obtained from design and production approval tests

In the event that the samples do not meet the required properties in any test conducted regarding design and production approval tests, samples shall be taken for the second time under the same conditions for the tests having negative results and the tests with negative results shall be repeated. If expected results can not be obtained in any of these tests, the test procedure shall be repeated. If positive results are obtained from the samples taken for the second time, all tests regarding design and production approval tests shall be repeated. if all results are positive, the Contractor shall be granted production approval.

Acceptance Inspection Tests

Acceptance inspection tests of fastening systems comprise of the below mentioned one series of tests;

Acceptance Tests and inspections on clamps

For the hardness test, clamp delivery force test and magnaflux test listed in this section, 1 sample against every 10.000 clamps for each cast where clamps are produced shall be tested. Regarding fatigue test, 1 sample for each cast shall be tested.

Hardness test

Tie clamps shall undergo a hardness test by Vickers Hardness Measurement Method (HV) after a sanding of 2-3 mm. Tie clamp hardness should be 400-460 HV.

Clamp delivery force test

A load of 25 kN shall be put on clamps. After receiving approximately 4 mm load, a residual stretching force of minimum 5.5 kN shall remain on clamp arms.

Magnaflux test

Clamps shall undergo a magnaflux test for crack inspection.

No hair crack should be encountered during this test.

Fatigue test

Rail connection areas of clamps shall be loaded with full wheel force and they should be resistant to 6.000.000 load change at a wavelength of 2 mm.

Dimensional inspection

For dimensional inspection, 1 sample shall be selected for every 10.000 clamps.

Results to be obtained

In the event that the samples do not meet the required properties as a result of the tests and inspections, samples shall be taken for the second time under the same conditions. If expected results can not be obtained from these samples too, that lot shall be rejected. In the event that positive results are obtained from the samples taken for the second time, samples shall be taken for the third time. Results obtained from the samples taken for the third time shall be the base for acceptance.

Acceptance tests and inspections on Angle Guides

For the density test, impact test and humidity test listed in this section, 1 sample shall be tested for every 10.000 angle guides.

Density test

Density value to be determined in accordance with ISO Standard 1183, DIN 53479 or the equivalent standards of TSE shall be between 1.35-1.45 gr./cm3.

Impact test

Impact resistance to be determined at the end of the test to be performed on a test piece of 10x10x110 mm according to DIN 53453 norm shall be above 40 kJ/m2.

Humidity rate

The humidity rate of the plastic angle guides soaked after being treated shall be 1-2,5%.

Dimensional inspection

For dimensional inspection, 1 sample shall be selected for every 10.000 angle guides.

Results to be obtained

In the event that the samples do not meet the required properties as a result of the tests and inspections, samples shall be taken for the second time under the same conditions. If expected results can not be obtained from these samples too, that lot shall be rejected. In the event that positive results are obtained from the samples taken for the second time, samples shall be taken for the third time. Results obtained from the samples taken for the third time shall be the base for acceptance.

Acceptance Tests and Inspections on Elastic Plate Pads

For the density test and electrical resistance test listed in this section, 1 sample shall be selected for every 10.000 elastic plate pads.

Static elasticity

Static elasticity: 50 - 70 kN/mm (shall be measured as secant elasticity between 18 and 68 kN)

Electrical resistance:

Electrical resistance shall be measured in accordance with DIN IEC 93, DIN IEC 167 norm and the value obtained shall be min. 2*108 Ohm*cm.

Dimensional inspection

For dimensional inspection, 1 sample shall be selected for every 10.000 plate pads.

Results to be obtained

In the event that the samples do not meet the required properties as a result of the tests and inspections, samples shall be taken for the second time under the same conditions. If expected results can not be obtained from these samples too, that lot shall be rejected. In the event that positive results are obtained from the samples taken for the second time, samples shall be taken for the third time. Results obtained from the samples taken for the third time shall be the base for acceptance.

Acceptance Tests and Inspections on Sleeper-Screws

Sleeper-screws shall undergo tensile and bending tests. These tests and inspections shall be performed on one series for every 10.000 sleeper-screws.

Tensile test:

Sleeper-screw shall be fastened at both ends in the tensioning machine and pulled until rupture occurs. Machine clutches shall be prepared in a special manner for this test and loading shall be made through the sleeper-screw axis. Ruptures which occur at the juncture of the head and body of the sleeper-screw shall not be taken into consideration.

Breaking load per mm of the transverse section measured at the foot of the thread section or the original transverse section of the sleeper-screw body (depending upon whether the break occurs in the flat or threaded section of the sleeper-screw) shall be in conformity with the tensile strength values specified for the material.

Bending test

Sleeper-screw body shall be bent with an angle of 90o on a shaft equal to 4d diameter. No breaks, incrustations or any other defect should occur during this test.

Dimensional inspection:

For dimensional inspection, 1 sample shall be selected for every 10.000 sleeper-screws.

Results to be obtained

In the event that the samples do not meet the required properties as a result of the tests and inspections, samples shall be taken for the second time under the same conditions. If expected results can not be obtained from these samples too, that lot shall be rejected. In the event that positive results are obtained from the samples taken for the second time, samples shall be taken for the third time. Results obtained from the samples taken for the third time shall be the base for acceptance.

Acceptance Tests and Inspections on Plastic Bolts

For all tests listed in this section, 1 sample shall be selected for every 10.000 plastic bolts.

Density:

Density value to be determined in accordance with ISO Standard 1183, DIN 53479 or the equivalent standards of TSE shall be between 1.10 – 1.15 gr./cm3.

Volumetric resistance:

Volumetric resistance shall be 2x 108 Ohmxm.

Dimensional inspection

For dimensional inspection, 1 sample shall be selected for every 10.000 bolts.

Results to be obtained

In the event that the samples do not meet the required properties as a result of the tests and inspections, samples shall be taken for the second time under the same conditions. If expected results can not be obtained from these samples too, that lot shall be rejected. In the event that positive results are obtained from the samples taken for the second time, samples shall be taken for the third time. Results obtained from the samples taken for the third time shall be the base for acceptance.

5.6.6. Gauges

All gauges necessary for the dimensional inspection of rail fastening systems shall be supplied by the Contractor and together with technical drawings they shall be handed over to the Engineer. Gauges shall be abrasion-resistant.

5.6.7. Marking

- Introductory mark of the producer,
- The last two digits of the date of production,

shall be eligibly sealed by a faint seal on the area of each fastening system shown in the technical drawings.

5.6.8. General conditions

Guarantee

HM type fastening systems shall be guaranteed against all defects which may occur during stocking and use for at least 3 years starting from the date of receiving.

Final inspection

DGII shall carry out the final inspection (visual or gauge examination) of the fastening systems in the places of delivery. Materials found defective as a result of the inspections and tests shall be rejected.

5.7. Machineries to be used for track construction

The main machinery to be used in the track construction shall be as follows:

- M1 Non-Stop Operation Tamping Machine
- M2 Switch Tamping Machine
- M3 Ballast Regulator
- M4 Stabilizer
- M5 Track Inspection Equipment
- M6 Track & Catenaries Inspection Machine
- M7 Non-Destructive Inspect Machine
- M8 Rail Welding Machine
- M9 Rail Grinding Machine

5.7.1. Common specifications for the railway equipment

All the machines shall be apt to operate on the railway which shall be constructed.

5.7.2. General mechanical specifications

All the machines shall be capable of performing operation on the electrified lines without power supply interruption.

All the machines shall be capable of performing operation on those sections having multiple lines without interrupting traffic, if any.

The buffers of all the machines shall conform to UIC 526-1 and 527-1 and the distance between the buffer axes shall be 1750 mm.

The maximum height of all the machines from the buffer shall be 1065 mm and the minimum height shall be 940 mm in case of wheel wear and tear.

The traction hooks and coupling assemblies of all the machines shall conform to UIC 520.825 and 826 conditions.

All the machines shall have a manual break which is capable of holding the machine in a stable position at an inclination of 30 %.

It shall be possible to brake all the machines from the locomotive when they are on service on the train and where necessary, it shall also be possible to switch the braked machines to an neutral / idle position and in this position, the machines may pass the brake air to the rear wagons.

All the machines shall have a projector and signal lamps meeting UIC conditions for the front and rear sides.

All the machines shall have an adequate number of lighting systems which shall provide excellent vision during operation at night.

There shall be wheel protectors in front of the machine wheels and these protectors shall ensure that any ballasts and pieces of ballast coming on the rail are cleared away, thus preventing the rail surface from getting damaged.

The originals or notarized copies of the annual calibration certificates of the machines and tools shall be submitted to DGII/Engineer before each machine and tool starts the work.

All the machine drivers and operators shall hold authorization / qualification certificates and the originals or notarized copies of these certificates shall be submitted to DGII before each machine and tool starts the work.

The Contractor shall be responsible for taking any necessary safety measures which must be introduced during the maintenance and repair works. Any measures which are additionally required by DGII staff shall be taken by the Contractor.

5.7.3. Tamping machine (M1)

The track repair speed of the machine equipped with the leveling unit and dressage unit (operation of correcting the axial deviations on the track) shall be minimum 1200 m/hour. The operation of the machine during operation may be set according to the track conditions and machine operating capacity.

The machine shall have an aggregate supply system which shall be capable of the tamping operation for the ballast beneath minimum two sleepers coming after one another at the same time without interruption. The machine shall carry out the operation of tamping for one sleeper with minimum 16 pickaxes.

The machines shall be capable of carrying out the operations of leveling, tamping and dressage together at the same time.

The tamping depth shall be settable.

The leveling and hoisting unit shall operate according to the proportional system.

The operation of dressage may be carried out without carrying out the measurement operation in advance.

The operation of dressage may also be carried out without removing the track and shall be without jolt / shock.

During the operations of tamping and dressage with leveling, the systems of hoisting and dressage shall operate only by getting support from the rail. The hoisting and dressage power shall be effective on minimum two points on each rail.

The machines shall be equipped with a device which shall automatically regulate any kinds of track geometry on the flat / even track and at the curbs. The machines may also be operated manually by getting the device out of operation.

The machines shall be equipped with a computerized measurement system measuring the line perimeters and storing them.

The machines shall have such means to hammer and tighten the tops of the sleepers.

The machines shall be capable of tamping the drill sleepers to the extent allowed by the standards.

The machines shall be capable of operating on the UKR and butt strap connections. The machines shall be equipped with a mechanism allowing double sleeper tamping.

Tamping repair shall be carried out by means of the application piles or by taking values from the poles, from which values may be retrieved, if any, or by complying with the higher points, if not.

During the mechanical repair of the line, the manual (topographic) measurement of the track shall be carried out by the Contractor and the repair of the track shall be made according to results obtained. The results of the manual measurement made may be uploaded on the computer systems of the machines. If considered necessary by DGII, measurement shall also be made by means of the measurement systems of the machines and repairs shall then be carried out accordingly.

All the measurements before the repair and for the acceptance works (manually made topographic measurements, mechanically made geometric measurements, etc.) shall be carried out by the Contractor.

5.7.4. Switch tamping machine (M2)

The dressage tamping speed of the machine with the leveling unit shall be minimum 400 m/hour on the flat / even track. The operation of the machine during operation may be set according to the track conditions and operating capacity of the machine.

The machine shall be capable of carrying out the operations of tamping and dressage with the level unit on the flat lines, switches and rail junctions jointly and separately, as applicable, and in addition, it shall also be capable of carrying out the operations of hoisting, tamping and dressing the heavy switches having concrete sleepers.

The machine shall stamp the bottom of the sleeper with 16 (sixteen) pickaxes at one time.

The machine shall have four tamping units, which independent of each other but concurrently operate and thus, it shall be capable of performing the complete tamping of the components in the switch zones such as cross rail junctions, switch hubs, resting rails and wing rails, which are difficult to have access to.

The tamping pickaxes shall be retractable so that the operation of tamping the small clearings may be carried out.

The machine shall be equipped with a 3 point hoisting mechanism which shall be capable of hoisting supplemental parts from the deviating track on the heavy switches having long sleepers. This system may

operate on the right or left depending on the operation direction of the machine. This system shall hoist the main and deviating line by only getting support from the rail synchronously.

The external tamping units shall be capable of performing tamping at a distance of minimum 2800 mm from the track axis and it shall be possible to tamp the long sleepers at one crossing.

The machine shall be equipped with a mechanism allowing double sleeper tamping. The machine shall have an automatic leveling system controlling the hoisting operation.

During the operations of tamping and dressage involving leveling, the hoisting and dressage systems shall operate by only getting support from the rail.

The machine shall be equipped with a computer which is capable of automatically regulating any types of the track geometry at the switches, track joints, even track and curb. When required the computer shall be disabled and then, the machine may also be operated manually.

The machines shall be equipped with a computerized measurement system measuring the line perimeters and storing them.

Tamping repair shall be carried out by means of the application piles or by retrieving values from the poles, from which values may be retrieved, if any, or by complying with the higher points, if not.

During the mechanical repair of the line, the manual (topographic) measurement of the track shall be carried out by the Contractor and the repair of the track shall be made according to obtained results. The results of the manual measurement made may be uploaded on the computer systems of the machines. If considered necessary by DGII, measurement shall also be made by means of the measurement systems of the machines and repairs shall then be carried out accordingly.

All the measurements before the repair and for the acceptance works (manually made topographic measurements, mechanically made geometric measurements, etc.) shall be carried out by the Contractor.

5.7.5. Ballast regulator (M3)

The machines shall regulate the ballasts nonstop and regularly at a minimum speed of 1200 m/hour (with a sweeper). The operation of the machine during operation may be set according to the track conditions and operating capacity of the machine.

During the operation, the following ballast movements shall be possible by means of the machine.

- From the right rail or ballast edge to the left rail
- From the left rail or ballast edge to the right rail
- To the center from the ballast edge
- To the ballast edge from the track center.
- From one ballast edge to another ballast edge

The angle of the edge plows may be set horizontally and vertically.

The edge plows may be set in such a manner ensuring operation without damaging the obstacles such as elevation piles and milestones on the edges of the line during operation.

It shall be possible to operate with one and both of the edge plows.

The machines shall have sweeping and storage units to sweep surplus ballast on both even tracks and switches as well as on the rail junction tracks. The depot volume of the ballast shall be minimum 3 m3. The sweeping unit shall be of such a design capable of taking surplus ballast to the shoulder zone and sending surplus ballast to the depot unit.

The stored ballast may be unloaded on the tamping zone of the ballast bearing and shoulder zone.

The machines shall carry out ballast regulation in their movements to both directions and it shall be taken to TCDD line profile after regulation.

At the end of the operation, the machine shall improve the ballast bearing to the required profiles and it shall thus take the ballast level to a level same as the sleeper level.

No ballast heap shall be left at the end of the operation by the machine. Any surplus ballasts, which cannot be removed mechanically due to physical reasons (zone at which the machine would get out of the track at the end of the work, switch zone and equipment located inside the line such as ATS and balise), shall be cleared manually and improved to the required profile if necessary.

5.7.6. Dynamic line stabilizer (M4)

The machine shall be equipped with two units of stabilizers installed between the bogies.

Stabilization shall be carried out uninterruptedly.

In order to prevent any uncontrolled line settlement occurring after the operation of tamping, the line shall be settled firmly in a control and regular manner through combination of horizontal vibrations and vertical power. The minimum vertical load and minimum frequency to be applied by the stabilizer unit shall be 340 kN for the vertical load and 0 – 42 Hz (variable) for the frequency, respectively.

The machine shall have a leveling system as well as systems of measurement and control the settlement value of the line by adjusting the power applied on to the rails.

The machine shall automatically set on the sections having super-elevation.

The stabilizer shall have a computerized control, measurement and storage mechanism indicating the status of the line.

A stabilization report shall be drawn up after stabilization.

5.7.7. Track inspection equipment (M5)

The Track Inspection Equipment shall be used in measuring and recording the track parameters in compliance with EN 13231 by pushing it by hand or towing it with a vehicle at a speed of up to minimum 15 km/hour before the line is opened for operation.

The Equipment shall have capabilities of measuring the line geometry (parameters) in both lines subject to the railway specifications furnished and conditions indicated for the operation zone and converting the measurements into graphs and storing and analyzing them by means of a computer.

The Equipment shall be operated on any types of railway lines (counter-rail lines, maneuvering tracks, side tracks, connection points, switches, , etc.).

The Equipment shall be capable of performing measurement in both directions at every speed interval at the same level of excellence and precision.

The Equipment shall be capable of measuring the following track geometry as a minimum, meeting the requirements under EN 13231.

- Measurement date and measurement time
- Kilometric location measurement, kilometer and hectometer signs
- Signs for structures such as switches, etc.
- Leveling of the right and left rails separately
- Track clearing (different from 1435 mm)
- Super elevation
- Flesh of the right and left rails separately
- Torsion

The computer on the Equipment shall be of such specifications displaying in real time the rail geometric variables during the measurement and storing necessary detailed digital data for subsequent assessments.

The computer on the Equipment shall allow correction of kilometers in real time during the measurement and inputting any fixed points located on the line (switches, surface crossings, etc.). The fixed points may be inputted may be pre-defined and inputted by a single key. The records shall also incorporate information on the date and time of record.

In addition to the equipment computer system, a software package in Turkish, based on Windows, for a limited number of users shall be made available for office PC computer systems so that data obtained may be assessed. Any measurements made may also be assessed and processed by means of this software package.

Any parameters measured may be printed on A4 paper graphically. In terms of easy access to any line irregularities recorded, all the coordinate points of various line geometry parameters must be marked on this schedule card. Determination of the location of the line geometry parameters to be recorded and tolerance limits related to the record scales for various parameters must be selectable and changeable by the computer before or after.

It must be possible to make a comparison of values of measurement made in two different times by means of the computer program. The differences developed by superimposing them provided that the graphs for two measures are in different colors must be visible.

Any measurements made by the computer program may be automatically analyzed. Any problematic zones on the basis of limit values thereof may be automatically found by means of the program.

The limit values for all the parameters and measurement values must be selectable and changeable in the assessments to be made in advance or later. On the graphic print-outs, the limit values must be indicated by

lines in different colors as the measurement values must be indicated numerically. Multiple limit lines may be drawn on the graphs.

Any measurement values, values for the sections beyond limit, which are obtained as a result of analysis and information on the differences found in comparison of two measurement results may be printable.

The Equipment shall be re-calibrated if requested so by DGII.

5.7.8. Track & catenaries inspection machine (M6)

Measurements shall be carried out for the preliminary acceptance procedures before the line is temporarily put into operation as a result of works in certain periods. The preliminary acceptance measurements may be made by the Track Geometry Measurement Equipment.

Minimum one measurement shall be carried out by the machine before the provisional acceptance of the line. After the errors found by Measurement 1 are corrected and a period of minimum 15 days elapses subsequently, the second Measurement shall be made on the same zone and the provisional acceptance procedure shall be proceeded with as a result of the measurement.

In case multiple measurements are made on the line, the values of minimum 3 measurements carried out may be assessed on the same graph, with each such measurement being indicated by a different color.

The machine shall have capabilities of conducting non-contact measurement of the line and shear geometry (parameters) subject to the railway specifications furnished and conditions indicated for the operation zone and converting the measurements into graphs and storing and analyzing them by means of a computer.

The machine shall have such a capacity allowing it to conduct measurement operations on a stand-alone basis or by getting towed by a locomotive at a speed of 80 km/h. In case of a machine to be towed by a locomotive, the supply of the necessary locomotive is under the responsibility of the Contractor and shall be supplied by the Contractor. The measurement speed of the machine may be set in line with the track conditions and machine capacity. The machine may conduct measurement of uniform excellence and precision at every speed interval.

Unless otherwise specified, the machine shall be suitable for measuring, recording and processing data obtained in compliance with the standards, EN 50121, EN 50128, EN 50129, EN 50159, EN 50155, EN 50161, EN 45545, EN50125, EN 50126, EN 13231, EN 13848, EN 50317, EN 50119, EN 50124 and IEC 61373, which are the parameters for the systems of railway and catenaries.

Track Geometry Measurement System

The Track Geometry Measurement Unit shall be capable of measuring the following track geometry parameters and recording them in the form of a graph. These parameters may be displayed and printed on the paper at the scales of minimum 1/1000, 1/2000, 1/5000 and 1/10000. The scale shall be settable as per requirement. Multiple tolerance limit lines may be placed on the measurement graphs. In addition to the records of graphs, the numerical analyses of the measurement results may also be provided as print-out and versions saved on the electronic media.

- Kilometric location measurement, kilometer and hectometer signs
- Measurement speed

- Signs for structures such as switches, etc.
- Longitudinal level and wave length interval of the right and left rail (m): (D1:3-25), (D2:25 70)
- Track clearing which is different from 1435 mm
- Super elevation
- Flesh wave length interval of the right and left rail separately (m): (D1:3-25), (D2:25-70)
- Torsion (assessment between the zero point and peak point)

The measurements to be made by the machine in connection with safety assessment shall conform to the standards stipulated by EN 13848. The machine shall also be capable of carrying out measurement in compliance with EN 13231. The minimum requirements for the measurement system under EN 13848-2 and 5 must be met for the assessment method and presentation of the results.

Rail Profile Measurement System

The machine shall be capable of conducting non-contact measurement of the rail profiles for the left and right rails at a speed of up to minimum 80 km/h individually and recording them graphically.

The analysis of the data obtained so that any problematic zones may be easily found shall be automatically made by the system.

The system may measure and record the following parameters for the profile measurement of both rails.

- Wear and tear of the right and left rails in a vertical direction
- Wear and tear of the right and left rails in a horizontal direction
- 450 wear and tear of the right and left rails
- Wear and tear percentages of the head areas of the right and left rails

Rail Corrugation Measurement System

The machine shall be capable of conducting non-contact measurement of the corrugation forming on the rail for the left and right rails at a speed of up to minimum 80 km/h individually and recording them graphically.

The analysis of the data obtained so that any problematic zones may be easily found shall be automatically made by the system.

The system may measure and record the following parameters for the profile measurement of both rails.

- Rail waving of the left and right rail on – [40 – 100] mm wave band
- Rail waving of the left and right rail on – [100 – 300] mm wave band
- Rail waving of the left and right rail on – [300 – 1000] mm wave band

Track Dynamic Diagnostic Equipment

Measurements of the drive quality shall be made and graphically recorded by the Equipment. The comfort co-efficient of the line shall be determined as a result of the measurements to be conducted. The assessment

of the wheel – rail interaction and equivalent conical form shall be achieved as per the relevant UIC standard at the stage of preliminary operation.

The measurements of Drive Quality shall incorporate the measurement of the following parameters:

- Equivalent conical form
- Drive Quality and acceleration measurement

The equivalent conical form value shall be assessed by taking as a basis the rail profile measurements.

The equipment shall be equipped with the systems measuring acceleration values and wheel / rail interaction forces as to the determination of comfort having impact on the passengers on board the vehicles travelling on the line.

Kilometer correction may be made during or after the measurement. Signs for the structures such as switches, etc., may be inserted during or after the measurement and their places may also be changed accordingly.

Synchronization shall be ensured between the actual kilometers (mileage) of the line and the kilometers (mileage) determined by the vehicle during measurement. A deviation of maximum 1 meter shall be permitted between the measurement results and actual kilometers (mileages).

There must be a storage and arrangement mechanism digitally storing the line original information data on the vehicle computer system. The stored data may be assessed on the main computer on the vehicle or on a different PC computer system in the office. The computer system must have capability to process the data obtained in real time or later.

The Contractor shall provide DGII with a software package and installation and operation documentation thereof in Turkish and English so that the data obtained may be assessed on the office PC computer systems. This software package must be capable of assessing and processing any measurements conducted. Measurements conducted in different times may be compared graphically and numerically so that automatic analysis thereof may be ensured.

The width of the recording paper must be sufficient enough to provide space for any geometric parameters of the track on a single paper print-out. In terms of easy access to any line irregularities recorded, all the coordinate points of various line geometry parameters must be marked on this schedule card. Determination of the location of the line geometry parameters to be recorded and tolerance limits related to the record scales for various parameters must be selectable and changeable by the computer in advance. Any measurement results must be printable graphically and numerically.

The graphic record of the measurement parameters must be in proportion to the traveled distance and independent of the travel direction of the vehicle. As a print-out is obtained, the limit values must be modifiable and multiple limit lines may be inserted if required.

The Contractor shall analyze the measurement results and mark any defective sections in the data files, submitting to DGII a report containing Excel sheets and graphs indicating the types of defects and their kilometers (mileages).

The Contractor shall submit in the reports to DGII the results of the measurement made no later than 5 days from the completion of the measurement.

The report submitted shall include the results of the measurements, a sheet of extract (scale 1:100,000) and a detailed table reporting about all the line parameters measured (scale 1:5000).

DGII may require additional information by having discussions with the Contractor if it so requires.

5.7.9. Non-destructive inspection equipment (M7)

The vehicle to be used for non-destructive inspection may be a railway vehicle, railway / highway vehicle, trolley type low speed railway car or an equipment which may travel after manually pushing or pulling it. The vortex currents and ultrasonic measurement equipment which shall be accommodated on the system to be used for detection of rail defects on the equipment may be on the same equipment and also, it may be on a different equipment.

As a result of the measurements to be made by the Equipment the whole of the rail head and frame and the projection of the rail frame on the rail bottom shall be checked.

The members of the staff, who shall conduct inspection, shall be certified staff having qualifications as per UIC 960 or EN 473 and the originals or notarized copies of the certificates held by such staff shall be submitted to DGII before commencement of the job.

The Engineer, who shall approve reports shall have Level II certificates and qualifications as per UIC 960 or EN 473 and the originals or notarized copies.

All devices to be used during inspection shall be manufactured in compliance with CEN.

The manual equipment to be used in ultrasonic verification inspection and the probes to be used in ultrasonic inspection shall conform to EN 12668 and the originals or notarized copies of the type approval certificates shall be submitted to DGII before the commencement of the job.

The system specifications of the vortex currents and probes and devices to be used shall conform to EN 13860.

The inspection reports of the automatic devices and manual devices shall have the same specifications and mutually compatible.

The probes and adapters to be used shall be suitable for the inspection system, meeting such specifications allowing the tests to be repeated.

The inspection procedures, instructions and report forms shall be submitted to DGII before the commencement of the job.

The inspection procedure shall incorporate the definition of the rail, reference documents, qualifications of the staff, who shall perform the inspection, condition of the rail, inspection zones, preparation of the scanning surfaces, contact provision media, definition of the inspection equipment, ambient conditions (environmental conditions), scanning plan, definition and sequence of the inspection works, assessment and recording levels, characterization of the defects, acceptance levels and inspection report.

The inspection procedures shall conform to the latest editions of RT / CE / IS and other related CEN standards.

The Equipment shall detect, as a minimum, the rail defects specified by the codes, UIC111 / 211, UIC411.1/421/431, UIC471/481, UIC112/212, UIC113/213, UIC133/233, UIC132.1/232.1, UIC132.2/232.2, UIC135/235/236, UIC154/254, UIC100/200, UIC301/302 and UIC412/422 as far as the surface and surface bottom defects of the rail (head, frame and bottom), rail welding components (welding + HAZ) and switches are concerned.

In the inspection of the surface crack with vortex currents, discontinuities of minimum 2 mm ± 0.2 or bigger, which are present on the line in the transversal and longitudinal directions, shall be detected.

The test frequency, probes, design and testing speed selected for inspection shall be capable of detecting the required discontinuities.

The inspection shall be commenced after the necessary conditions are met for the inspection precision and stability. The information related to any discontinuities detected during inspection shall be directly transferred to the hard drive and such information may be used whenever required as well as for verification.

It shall be assured that the positions of the probes are correct during the inspection and any discontinuities detected shall be marked. Any deviations shall be taken down under record during the inspection.

Repeated inspections or verification of the locations of discontinuities shall be inspected by means of the devices having the same specifications and same precision as a minimum and any deviations shall be indicated by a report.

The Contractor shall be responsible for clearing any foreign residues such as dirt, oil and burr which would affect the inspection as the inspection is in progress.

Whenever the track conditions limit performance of the inspection and precision requirements, the location and length of the relevant rail on the line shall be taken down under record and reported to DGII.

The inspection reports shall be submitted on both electronic medium and in a form approved by Level II certified staff.

All of the findings shall be taken down under record and verification of any defects which are 5 mm to the length of the line and 2 mm to the width of the line on the linear lines and 5 mm on the voluminous lines shall be carried out by a manual device and results shall be reported fully and completely.

Any defects detected during the inspection shall be treated as per the relevant UIC norm governing the types, dimensions and positions thereof and the following shall be assessed as indicated below:

A: length of the defect (mm) B: width of the defect (mm) Linear defect $a \geq 3b$ Voluminous defect $a < 3b$

The inspection report shall incorporate the contract number, rail definition, inspection time, location of the inspection, definition of the inspection probes, condition of the rails on the inspected line, ambient conditions, definition of the equipment used, relevant standards or technical information which are referred to, reference to the inspection procedure, the names, surnames, qualifications and signatures of the persons performing and approving the inspection and inspection results and any deviations as compared to the values stipulated by the procedure, if any.

The inspection report shall fully and completely indicate the contact liquid used, probe positions, probe types and dimensions, surface speed for individual probes, coverage width of the probes, scanning

directions of the probes and distance of the probes from the surface. A diagnostic number shall be assigned to each defect and UIC codes shall be used for such defects.

The Contractor shall deliver the data base to the Engineer for the purpose of assessing reports, conducting verification tests and monitoring data. The data base shall allow test repetitions and tracking the discontinuities in the periodical inspections. It shall contain basic information such as the assigned number, location, UIC code, position and size of the discontinuity.

The vortex currents and ultrasonic measurements may be carried out at a single pass and also, they may be individually performed at different passes.

The vehicle on which the vortex currents and ultrasonic inspection equipment shall be installed may be a railway vehicle; also, it may be a mobile vehicle which can travel on both roads and railways.

In case a mobile vehicle is used as the vehicle on which the vortex currents and / or ultrasonic inspection equipment shall be installed, the vehicle shall have necessary fittings and equipment so that it may easily be removed out of the tract or towed and pushed by another railway vehicle in compulsory situations when the vehicle is on the railway.

DGII may require additional information in the reports through discussions with the Contractor.

5.7.10. Rail welding machine (M8)

The rails installed on the line shall be welded as per the Technical Specifications for Rail Welding.

The machine used for welding must be a mobile butt-welding machine.

The Rail Welding Machine to be used shall be computer controlled and the gauging of the welding as the welding is performed shall be carried out by the computer.

The distance between the welding seam on the line, which is completed and relieved of stress, and the nearest sleeper shall be minimum 10 cm.

The line shall be relieved of stress after the welding operation and no undesired substances such as ballast particles, etc., between the connection materials and sleepers (between the clearing guide and rail, etc.) shall be left. For this purpose, the surface of the line shall be cleared by equipment such as air compressors, etc.

Ballast particles shall be prevented from getting into the lag screws located on the sleepers during mechanical welding on the line and for this purpose; dead plugs shall be installed on to the lag screw bearings if required.

The range between the line neutral temperature and continuous welding performance temperature shall be provided by DGII before welding is commenced.

The grinding length during the grinding of the welded pieces shall not exceed 500 mm in both directions from the welding seam. In compulsory cases, permission shall be obtained from DGII.

After the completion of the welding operation, all the welded pieces shall be numbered as required by DGII and the information in connection therewith shall be delivered to DGII in the form of an Excel sheet. Temporary numbers may be assigned to the welded pieces during performance of welding and such numbers shall be written on the rail adjacent to the welded piece.

5.7.11. Rail grinding machine (M9)

The machine shall provide the protective grinding of the rail head with the circular grinding stones of the rails on the railway lines, switches and track junctions as designated and it shall have such capability of correcting any defects such as corrugation, burrs, welding excesses, etc., located on the rails as per the tolerances specified by EN 13231-5. The machine shall have minimum 16 stones and the stones shall make grinding by rotating in a circular position.

Grinding unit

The grinding speed may be set without causing interruption.

The heat generated during grinding shall not cause any deformation on the rail. The machine shall not cause any damages to the rail or switches during grinding.

There shall be a protection system on the grinding unit so that any sparks occurring during grinding would not cause fire.

Necessary measures shall be taken so that any broken or damaged stones would not jump out of the line and cause any accidents.

Dust collection and fire control

Each grinding unit shall be equipped with an effective dust collection system so that dust generated during operation is collected.

There shall be fire extinguishing equipment on the machine immediately to respond to any fire which could break out in its surroundings during operation.

Measurement and computer systems

The machine shall have a digital rail profile measurement instrument which is capable of measuring the profile of the rails by receiving sampling signal from minimum 40 points. The rail profile may be measured by this measurement instrument both before and after grinding and the target rail profile and measurement result may be compared and the measurement date and time shall be automatically assigned by the program on the measurement system and any other necessary information such as the line section measured, line data, etc., may be inputted manually.

There shall be a memory card on the measurement instrument which is capable of storing any measurements made and such data may be archived on the computer on the machine or on any office computers.

The machine shall have a portable rail profile measurement instrument which is capable of measuring the longitudinal profile of the rails at a single pass and both rails at the same time. On this measurement system, there shall be a laptop computer system withstanding any kinds of weather conditions (rain, sudden temperature changes, dust, cold, heat, etc.). The data may be viewed in real time as well as on the screens in both directions.

The measurement date and time shall be automatically assigned by the computer to the computer system on the measurement instrument and any other necessary information such as the line section measured, line data, etc., may be inputted manually.

The data retrieved from the measurement system shall be assessed according to the limit values specified by EN 13231 and these limit lines shall be automatically placed by the system on the graph and the percentage of the defective zones shall be automatically calculated and marked on the graph by the program.

The longitudinal profile of both rails may be measured by this measurement system at a single pass and recorded on the built-in memory card and archived on the computer on the machine or on any office computers.

The machine shall have a removed metal measurement instrument to measure the metal thickness of the metal removed after grinding. In order to calculate the thickness of removed metal, a total of six measurements once for each rail from minimum three points shall be made before and after grinding (6 times before grinding and 6 times after grinding) and their average shall be taken as a basis. The data to be obtained as a result of measurement shall be printed by the measurement instrument on paper and archived directly. Each measurement shall be printed on 1 print-out (in order to calculate the thickness of removed metal in a given zone).

The machine shall have a roughness measurement instrument to measure the roughness on the rail after grinding. The data to be obtained as a result of measurement may be printed on paper after it is transferred to the measurement equipment or another PC.

Grinding Work Tolerances and Acceptance

The measurement of the line for which grinding is already made or will be made shall be carried out by using the measurement devices to be supplied by the Contractor.

No continuous or excessive bluish color must develop on the rail after grinding.

No grinding residues, dust, etc., shall be left on the line (switches, even tracks, equipment located on the track) after operation to be carried out by the machine and for this purpose, the line surface shall be cleared by compressed water if required.

Surface conditions

Visual inspection shall be made on minimum 20 % of the line and no visible errors on the rail profile shall be accepted. During the process of grinding, the rail cross section shall be ground up to 5 0 on the external side and up to 65 0 on the track clearing side and controls shall be conducted on this section.

Longitudinal tolerance and acceptance of the profile:

This measurement shall be made by the measurement instrument indicated by specifications at the end of each shift and the following tolerances shall be considered.

Speed	**Wavy Site (Uneven)**	**Localization of the WavySite**	**Tolerances**
All the speeds	$10 < \lambda \leq 30$ mm	0,15 m	+/- 0,01 mm

	$30 < \lambda \leq 100$mm	0,50 m	+/- 0,01 mm
	$100 < \lambda \leq 300$mm	1,50 m	+/- 0,03 mm
	$300 < \lambda \leq 1000$mm	5,00 m	+/- 0,10 mm

SW= 30 mm. – 300 mm.

LW= 300 mm. – 1 m.

Scale for SW 1 mm/ page = 0,01 mm wave

Scale for LW 1 mm/ page = 0,1 mm long wave depth

Transversal cross tolerance of the profile:

Measurement shall be made and recorded by the rail measurement instrument on the same point every 500 m on each switch before and after each operation of grinding. The difference between the present profile measured after grinding and the target profile (tolerance values) is maximum + 0,3 mm. / - 0,3 mm.

Removal of metal

This measurement shall be made and recorded by the measurement instrument. The thickness of the metal layer to be removed in order to remove the de-carbonized top layer on the rail, correct any geometric errors on the rail welding and rectify any potential direction errors shall be 0,2- 0,5 mm.

Maximum surface grinding width shall be as follows:

- 5 mm on the area with a radius of 13 mm
- 7 mm on the area with a radius of 80 mm
- 10 mm on the area with a radius of 300 mm

Maximum unevenness

This measurement shall be made and recorded by the measurement instrument. The maximum unevenness shall be Ra = 0,008 mm. (8 microns). Unevenness shall be measured and recorded on each switch 500 m.

Any tracks / switches for which grinding is performed upon the completion of work after each shift shall be controlled by DGII superstructure staff and a "work report" shall be drawn up containing the following considerations as a minimum and signed by the Contractor and the Engineer.

- Date
- Line section
- From km to km
- Number of passages (crossings)
- Duration of grinding
- Length of the section on which grinding is completed
- Time for commencement and completion of the work

- Various issues: unforeseeable conditions, any rail defects encountered, etc.
- Rail longitudinal profile record
- Rail cross section records (before and after grinding)
- Thickness of the metal removed
- Unevenness condition after the operation of grinding

In the event that the track grinding is found compliant as a result of the measurement and controls conducted, the grinding just made shall be accepted and where it is found non- compliant, the grinding conducted shall not be accepted and this shall be indicated by the work report.

5.7.12. Special conditions

The Contractor shall obtain approval of DGII before it uses any machines on the lines in question.

The Contractor is obligated to meet any requests issued to the Contractor in respect of the operation dates notified to the Contractor, transit of the machines, any location changes to be made by the Contractor and any requests provided to the Contractor in terms of cooperation with DGII.

Any consumables of the machines including fuel shall be provided by the Contractor.

Any materials (rail, sleepers, small items of material, ATS device, etc.) damaged by the Contractor employees or machines shall be replaced by new items.

The machines shall be delivered to DGII in a condition ready for operation after they are overhauled.

5.7.13. Staff

Detailed information shall be provided on the qualifications and numbers of the staff who must be made available for each machine at the work location.

The Contractor shall furnish to DGII the following before each machine and instrument is allowed to commence operation: ID particulars of any potential staff to be employed during the works, items of work for which such staff is allowed to carry out, information on any other railway administrations for which such staff has so far performed works, their positions under such works for such administrations, types of railway on which they have worked (speed, conventional lines, light rail systems etc.), a list containing information on the certificates verifying that any such staff is in possession of the qualifications necessary for performance of respective works (certifications for completion of training and examinations, licenses, other documents) and copies of any certificates held by the members of staff covered by this list as well as certificates to be obtained from the relevant railway administrations in connection with the works previously carried out by such staff. If requested by DGII, the originals of the certificates and documents shall be submitted. The Contractor shall use the members of staff identified by the list in its works. Therefore, the lists shall also include any substitute staff.

The staff, which shall perform welding, shall hold authorization certificates received from the railway administrations or manufacturers.

5.7.14. Parking and transport operations for the machines

The transport of the machines to the Turkish customs shall be carried out by the Contractor.

The transport and operation of the machines after they arrive in Turkey shall be in line with the instructions of DGII.

The transport of the machines on TCDD's lines for long distances shall be provided by the Contractor in a hot condition by connecting the machines to each other or in a cold condition by connecting to a set of trains. In the event that the machines are shipped on a set of trains, this service shall be provided by DGII. The machines shall meet the necessary UIC conditions so that they may be towed by the set of trains.

The method of transporting the machines (in a hot or cold condition) shall be decided by DGII officials.

The Contractor shall ensure that an adequate number of staff accompany the machines during transport on a set of trains for the purpose of taking necessary safety measures to prevent any potential damages to the machines.

There shall be an authorized member of DGII staff on the vehicle during the travel of the machines on those railway lines open to traffic on their own.

The Contractor shall provide necessary communication devices so that the vehicles may have inter-communication whereas the devices for traffic related communication shall be furnished by DGII.

All the railway machines shall be suitable for traveling on their own or as part of the train sets in both directions at a minimum speed of 80 km / h. The mobile railway vehicles may travel on the railway on their own at a minimum speed of 50 km / h. Any machines other than them may not travel under railway traffic (while the line is open). A machine shall get on the line in the measurement zone and it shall then be removed from the line upon completion of the measurement.

The machines shall conduct the departure and return travels from the stations and sidings where they are parked to the daily work locations on their own.

The Contractor shall ensure security of any machines or Contractor owned equipment at the parking lots.

5.8. Insulated joints

5.8.1. Scope of works

These specifications cover the manufacturing, acceptance conditions, material properties and electrical resistance including tests of the insulated joınts with insulated rails to ensure the insulation of rail joints electrically in signalization regions.

5.8.2. Production conditions

5.8.2.1. Material

Fishplate

Steel fishplates to be used in the manufacture of insulated joints with insulated rails shall meet the requirements specified in UIC 864-8 and be in compliance with 60 E1 rail. Of the steel used, tensile strength shall be between 550 and 650 N/mm2 and minimum tensile strain shall be 18%.

Throughout the manufacturing operation, fishplates shall maintain their characteristics. Fishplates shall have 4 holes; holes spacing and diameter shall comply with the approved design.

Rail
Rails to be used in the manufacture of insulated joints with insulated rails shall be 60 E1 having 900 A quality and meet the requirements specified in the Rail Technical Specifications.

Total length of insulated rails shall be min. 5.00 m. Accordingly, hardened area shall be 140 ± 10 mm; gradual transition area which shall prevent probable scours max. 40 mm and the area affected by heat max. 10 mm.

Bolts nuts washers
Bolts and nuts to be used shall have the dimension of M24 and the quality of INSU 10.9.

Rail separator insulation material
Insulation material to be placed between rails shall have a thickness of 4-6 mm and the properties to fulfill the electrical specified tests.

Adhesive
The type and all technical properties of the adhesive material which the Contractor shall use in the manufacture of insulated joints with insulated rails shall ensure the tests basic to approval.

Marking
The following symbols shall be visibly embossed on an appropriate section of fishplates.

- Manufacturer's mark
- The last two digits of the date of manufacture

5.8.3. Acceptance conditions

The Engineer shall conduct interim audits at certain stages and intervals without informing the Contractor in order to prevent the occurrence of irreversible faults during the production process of insulated joints with insulated rails, hinder delays in delivery time and rectify faults in time.

The findings of the interim audits conducted shall be put into report form in such a way to include the signatures of the Contractor and the relevant technical personnel.

The fact that the reports prepared as a result of interim audits are positive or negative does not mean the acceptance or the refusal of the goods. However, it shall be taken into consideration in the evaluation to be carried out at the examination and acceptance stage.

In the event that as a result of the audits conducted it is found out that insulated joints with insulated rails have not been produced in accordance with the technical specifications, the report shall be prepared.

The Engineer may inspect the conformity of rails, fishplates, bolts, nuts and spring washers used in the manufacture of insulated joints with insulated rails in accordance with the tests included in the relevant UIC specifications.

The Engineer shall inform the Contractor about the date when examination and acceptance procedures shall be carried out and shall inform in written that the Contractor should be ready in the given place, day and at the given hour.

The Contractor shall take measures and put the necessary apparatus, materials and personnel to enable all the goods submitted to acceptance to be investigated in accordance with the technical specifications.

If the results of the examinations conducted on the insulated joints with insulated rails which have been delivered within delivery time are non-conforming, the Contractor shall retake the goods and bring the new ones or demand an objection examination.

5.8.4. Physical examination

The surface of insulated joints with insulated rails shall be uniform and there shall be no deflection at the juncture. Uniformity shall be checked by a 1.000 mm long steel gauge. Clearance between gauge surface and rail surface should be maximum ± 0,2 mm. Physical examination of rails shall conform with the technical values specified in the Rail Technical Specifications.

Insulated joints with insulated rails shall have no manufacturing defect. Insulated joints with insulated rails which are found to have deformity and manufacturing defect during inspections shall be kept apart and after they are replaced for free with new insulated joints with insulated rails having appropriate properties by the Contractor laboratory examination shall be commenced.

5.8.5. Laboratory examination

In the event that the insulated joints with insulated rails submitted to the acceptance do not meet all of the physical properties stated in the Technical Specifications, laboratory examination shall not be commenced.

If insulated joints with insulated rails are supplied within the country, laboratory examination shall be performed by the Contractor in one of the accredited private laboratories or relevant university

Selection of test parts

Minimum 2 samples shall be selected by the Engineer's inspection for every 500 insulated joints with insulated rails.

Test order

The following tests shall be conducted on the selected samples in accordance with the stated order.

1. On the sample
    a) Tensile Test
    b) Electrical Tests
2. On the sample
    a) Fatigue Test
    b) Electrical Tests

Tensile test

This test shall be performed by applying a tension force in the direction of longitudinal axis of the connection. The connection should be able to resist to a load of minimum 1500 KN without any sliding, crack and loss of non-conductivity.

Fatigue test

The connection should meet the following test requirements.

- Test sample length: Lo = 1000 mm.
- Frequency: F= 500 cycle/minute
- Upper load: 200 N/mm2
- Lower load: 15 N/mm2
- Number of load application: 5x106 times.

Insulated joints should not have any sliding, crack and loss of non-conductivity after testing.

Electrical tests

Resistance in Ohms

This test shall be performed in a place which is equipped with hygrometer and thermometer and where it is possible to change ambient temperature. İnsulation test shall be conducted by employing Volt-ampere system by finding resistance value with the help of R= V/I formula or measuring this value by a high-quality device (mega ohmmeter).

In the measurement carried out by the device (mega ohmmeter), two readings shall be executed by turning towards + (positive), - (negative) poles and two reading by turning towards - (negative), + (positive) poles with a voltage of 250-500 V cc. Average of the four readings shall determine the resistance in ohms and at an ambient temperature of 25 °C this value shall not be below the following values.

Humidity %	Joint Resistance in Mohms
60	600
65	70
70	7
75	3
80	1,5

Electricity insulation test

Insulation Resistance should be minimum 20 Mohm for 500 V (DC).

Dielectric hardness

Dielectric hardness test shall be performed by a voltage amplifier of > 5 Kvc 50 Hz scale installed within an auditory or visual system for the purpose of determining discharge.

Voltage should be gradually increased from 0 to 1 KY; this value should be maintained for 1 minute and later on increased up to 4 KY by stopping for 1 minute every 1000 Volt.

If the sleeve is able to resist for 1 minute to a voltage of 4 KY c/50 HZ without discharge, dielectric hardness test shall be considered to be successful.

5.8.6. Evaluation of test results

Regarding the inspection tests to be performed in the event of objection to the test results, new tests shall be conducted on 2 samples for every 500, being minimum 2.

Tests shall be performed on the samples taken by inspection members and the values obtained shall conform to the values and technical properties specified in technical specifications. If the conformity of the results obtained from the first inspection of the samples is not satisfying, one more examination is carried out. In the event that both examinations give the same result, final decision is made. If these two examinations give different results, a third examination is carried out on that sample and the decision is made in accordance with the results of these three examinations.

5.8.7. Preservation, packaging, marking

Insulated joints with insulated rails shall be made suitable for all kinds of transportations.

Operations such as packaging, lacing, etc. shall be carried out by taking all kinds of external factors and ease of handling into consideration.

Insulated joints with insulated rails shall be transported without any deformation and delivered as stacked at the place of delivery.

Weight and quantity shall be determined separately for each loading. Package shall bear a label stating the weight and quantity. Unlabeled packages shall not be permitted to be shipped.

5.8.8. Guarantee

Insulated joints with insulated rails shall be guaranteed for 5 years as of the final lot acceptance date against any manufacturing defects and defects which cannot be detected during acceptance.

In the event that the insulated joints with insulated rails manufactured in accordance with the technical specifications break down within guarantee period, the Contractor is obliged to replace them.

ANNEX: Technical Drawings

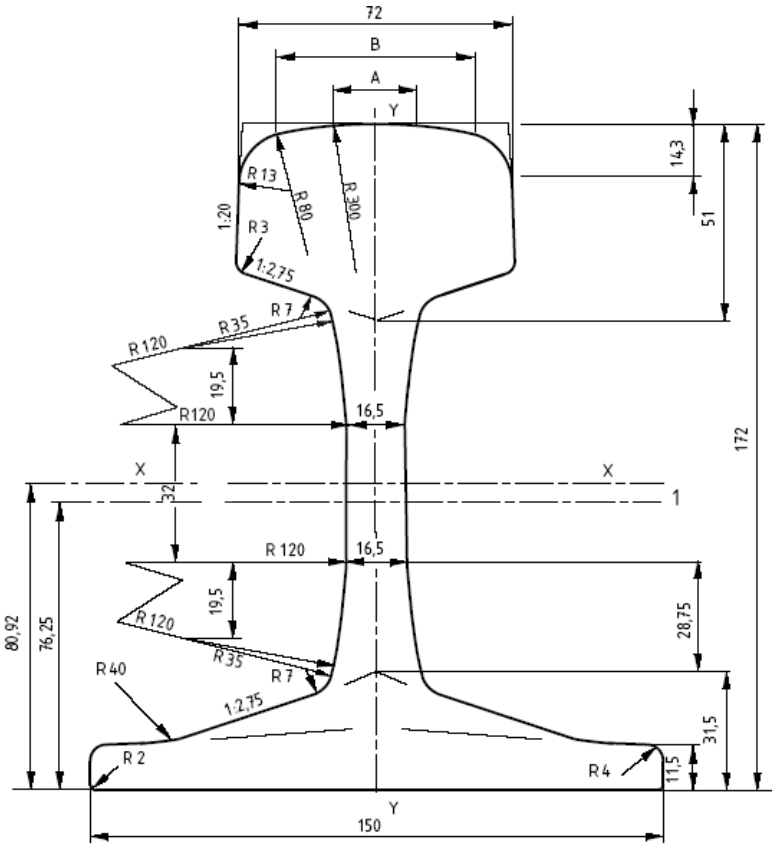

Key

1 Centre line of branding

Cross-sectional area	:	76,70	cm^2
Mass per metre	:	60,21	kg/m
Moment of inertia x-x axis	:	3038,3	cm^4
Section modulus - Head	:	333,6	cm^3
Section modulus - Base	:	375,5	cm^3
Moment of inertia y-y axis	:	512,3	cm^4
Section modulus y-y axis	:	68,3	cm^3

Indicative dimensions : A = 20,456 mm
B = 52,053 mm

5.9. Fishplates

5.9.1. Production requirements

Production operations

The selection of production operations for the profiles to be used in the manufacture of finished fishplates shall be made by the Contractor.

The Contractor shall employ the most appropriate methods throughout the whole production operation to fulfill the requirements of final fishplates stated in these specifications.

- Fishplates shall be clear of all kinds of manufacturing defects
- Fishplates shall have no fractures, cracks, dents, burrs and other defects
- Hammering, cold deformation, quenching or reheating operations shall not be carried out on fishplates

Fishplate manufacturing shall be conducted in accordance with the dimensions and tolerances stated in the picture.

Sawing

Fishplates shall be sawed from profiles and sections shall be vertical to the axis and free of scrapings and dents and be smooth. Profiles shall certainly not be cut by press, guillotine or using similar operations. Following the sawing operation, fishplate surfaces shall not have any deformations, cracks, burrs, cavities and manufacturing defects scars. Operations shall be carried out in accordance with the tolerances.

Drilling or punching

Fishplates may be either drilled or punched. The manufacturer is free to choose one of these operations. No deformations shall be allowed in fishplates or on fishplate surfaces due to drilling or punching operation and the burrs at hole edges shall be removed. The hole edges will have a 1 mm wide chamfers with an angle of 45 degrees.

Following the drilling or punching operation, fishplate surfaces shall not have any deformations, cracks, burrs, cavities and manufacturing defects scars. Operations shall be carried out in accordance with the tolerances.

5.9.2. Technical specifications

General

The material to be used in the production of fishplates shall meet the following mechanical properties:

- Tensile Strength: 550-650 N/mm 2
- Strain After Fracture: Min. 18%

Gauges

All gauges required for inspecting the fishplates shall be provided by the Contractor and submitted to the approval of the Engineer/DGII.

Before production; in accordance with the theoretical sketch of the Fishplate Profile cross- section to be produced, the Contractor shall deliver to the Engineer sets of gauges agreeable to '-' and '+' tolerances and the technical drawings where the tolerances of these gauges are shown. Gauges shall have been hardened in such a way to be abrasion-resistant. These gauges shall be stamped after being approved by the Engineer/DGII.

During inspections, only those gauges bearing the stamp of DGII/Employer shall be valid.

Tolerances

Fishplates shall be produced in accordance with the sizes and tolerances stated in the picture.

Besides the tolerances may be:

- longitudinal deviation 0.16 mm for each 100 mm length
- vertical deviation 0.10 for each 100 mm length
- ± 0,5 mm in holes
- ± 0,5 mm vertically in fishplate section
- ± 0,5 mm horizontally in fishplate section
- For length: ± 1 mm
- inclination of fishplate surface (lateral surfaces contacting the rail) 2%

Mass
The nominal mass to be accepted for a fishplate is calculated based on 7.85 gr/cm3 density of steel.

In each delivery, the average of the weights of 100 fishplates to be selected by the Engineer/DGII and the Contractor in half shares shall be calculated and the average mass value of that delivery is found out. The mass delivered is calculated by multiplying the average mass and the number of fishplates delivered.

In the event that the average mass is higher than the nominal mass, payment is made up to 1% excess. In the event that the average mass is lower than the nominal mass, the payment is made on the base of the average mass. Weight tolerance of fishplates: may be less up to 1% and higher up to 2% according to the nominal mass.

Marking
Mark signs on the fishplates shall be marked legibly on the exterior surface of the fishplates as embossing in such a way that the embossing height shall be maximum 2 mm and the area which the marking shall cover shall be 10 cm2;

- Introductory mark of the producer,
- The last two digits of the date of production, shall be marked as shown in the attached picture.

5.9.3. Acceptance conditions

The Engineer/DGII shall conduct interim audits at certain stages and intervals without informing the Contractor in order to prevent the occurrence of irreversible faults during the fishplate production process hinder delays in delivery time and rectify faults in time.

The positive and negative matters detected during the interim audits conducted shall be put into report form in such a way to include the signatures of the Contractor.

The fact that the reports prepared as a result of interim audits are positive or negative does not mean the acceptance or the refusal of the goods. However, it shall be taken into consideration in the evaluation to be carried out at the examination and acceptance stage.

In the event that as a result of the interim audits conducted it is found out that fishplates have not been produced in accordance with the technical specifications, the report to be prepared.

5.9.4. Inspections and tests basic to acceptance

The Engineer shall inform the Contractor about the date when examination and acceptance procedures shall be carried out and shall inform in written that the Contractor should be ready in the given place, on the given day and at the given hour.

The Contractor shall take all kinds of measures and put the necessary apparatus, materials and personnel to enable all the goods submitted to acceptance to be investigated in accordance with the technical specifications or examined.

5.9.5. Physical examination

Inspections in terms of dimensions and workmanship shall be performed as 1 Wald diagram for 5.000 fishplates in accordance with the attached Wald diagram.

Fishplates shall be within the dimensions and tolerances shown in the technical drawings.

At least ten (10) samples selected for physical examination shall be stamped by the Engineer in the presence of the Contractor in such a way that the characteristics of the samples shall not be changed and kept in the place of delivery until the end of acceptance of that lot.

Laboratory examination

In the event that the fishplates submitted to the acceptance do not meet all of the physical properties stated in the Technical Specifications, laboratory examination shall not be commenced.

Tests shall be performed in accredited laboratory under the supervision of the Engineer.

Selection of the parts for testing
A test shall be conducted for each casting.

Tensile tests
Tensile Test shall be performed when the test parts are cold.

The following acceptable tests shall be conducted (Tensile test shall be performed on the material to be used in the production of fishplates):

Tensile test:

- Tensile Strength: 550 – 650 N/mm2
- Strain after fracture: Min. 18%

Tests to Be Performed on Finished Fishplates
A tensile test and a chemical analysis test intended merely for information purposes shall be performed on fishplates. ISO standards shall apply in the event of matters not stated in these specifications regarding the test methods and the conditions under which tests shall be carried out.

Chemical analysis test shall be conducted merely for information purposes.

A chemical analysis shall be conducted for each casting.

Selection of test samples:

Test parts shall be processed as cold by the machine and no hammering, cold deformation, hardening or tempering shall be carried on.

A tensile test shall be performed for each casting.

5.9.6. Evaluation of test results

The Contractor may object to the objection report given as a result of the physical examination in accordance with the agreement provisions and request a second examination. The samples belonging to the fishplates rejected in the first physical examination shall be subject to a second examination by a new acceptance commission to be organized by the Engineer.

Regarding the inspection tests to be performed in the event of objection, the necessary tests shall be conducted on 2 samples for each casting.

Tests shall be performed on the samples taken by inspection members and the values obtained shall conform to the values and technical properties specified in technical specifications. If the conformity of the results obtained from the first inspection of the samples is not satisfying, one more examination is carried out. In the event that both examinations give the same result, final decision is made. If these two examinations give different results, a third examination is carried out on that sample and the decision is made in accordance with the results of these three examinations.

5.9.7. Preservation, packaging, marking

Fishplates shall be made suitable for all kinds of transportations.

Operations such as packaging, lacing, etc. shall be carried out by taking all kinds of external factors and ease of handling into account.

Fishplates shall be transported without any deformation and delivered to the Engineer as stacked at the place of delivery.

Weight and quantity shall be determined separately for each loading. Package shall bear a label stating the weight and quantity. Unlabeled packages shall not be permitted to be shipped.

5.9.8. Guarantee

Fishplates shall be guaranteed by the Contractor for 2 years as of the production year.

5.10. Aluminothermic welding materials

5.10.1. Scope of works

These specifications cover the technical requirements, acceptance conditions, delivery periods and the properties of sets of aluminothermic material, prefabricated welding mould and crucible to be purchased by the Contractor for 60 E1- 900 A and 60 E1- Rail with Hardened Head. Matters specified in these

specifications apply to aluminothermic welding materials to be purchased for both 60 E1 - 900 A and 60 E1 Rail with Hardened Head.

5.10.2. Type and quantity

60 e1 – 900 A Rails

Aluminothermic (aluminotermite charge, prefabricated mould, automatic insert, if available materials and sparkler to be used together with the insert), spare prefabricated welding mould, crucible and adhesive paste adequate for unit prefabricated mould which conform to 60 E1 – 900 A rail and produced in accordance with the requirements and properties specified shall be purchased.

5.10.3. Technical requirements

Material Properties

Aluminothermic
Aluminothermic material suitable for 60 E1 rail shall be in conformity with 60 E1 rail form and 900 A rail steel quality; Aluminothermic material shall be bagged in portions stated.

Welding mould
Welding moulds shall conform to the short preheat system and 60 E1 rail profile included in the attached drawing.

Crucible
Crucible internal volume shall be suitable for termite portion volume and the crucible shall be designed to prevent overflows during reaction.

Crucibles shall resist to a temperature of minimum 2500 °C without decay.

Crucibles shall be packed by employing a method to be determined by the Contractor taking into consideration the ease of transportation and the prevention of damage during transportation.

5.10.4. Acceptance conditions

Tests

All tests included in these specifications shall be carried out in accordance with ISO standards. The Contractor shall inform the Engineer and DGII/Employer that the Aluminothermic welding material, prefabricated welding mould and crucible produced are ready for tests and inspection.

All tests shall be performed in the production plant by the Contractor under the supervision of the Engineer in accompany with DGII/Employer. If there are not adequate laboratories in the production plant, tests shall be carried out in accredited laboratory which the Engineer shall deem suitable.

Tests and inspections shall be performed for once for every 2000 charges for 60 E1 – 900A rails and for once for every lot for 60 E1 Rails with Hardened Heads. Test samples shall be selected by the Engineer. If these tests produce positive results, materials of that lot shall be accepted. In the event that any of the tests produce negative results, the test shall be repeated on another sample to be taken from the same bulk; if

these tests produce positive results, materials of that lot shall be accepted. If not, materials of that lot shall be rejected.

Fatigue test
Test shall be performed on a simply supported rail having a length of 130 cm, a clearance of 1.00 m and an Aluminothermic weld at the center.

- Upper Load 220 N/mm2,
- Lower Load 50 N/mm2
- Frequency 5-60 Hz,
- No crack or fracture shall occur on the weld after 5.000.000 cycles.

Static bending test
Test shall be performed on a simply supported rail having a length of 130 cm, a clearance of 1.00 m and an Aluminothermic weld at the center. The sample is exposed to bending stress by applying a singular force to the center of the rail. Rail fracture stress should be minimum 750 N/mm2 and the deflection that rail shall give before fracture should be:

- Minimum 15 mm for 60 E1- 900 A quality rail.

Hardness test
In order to determine the weld hardness; standard Brinell Hardness Test is performed on 3 different points which are located 10 mm away from each other on the bearing surface of the welding. Arithmetic mean of the Brinell Hardness values obtained from these tests is accepted as the Brinell Hardness of the weld in question. Brinell Hardness value of the welding shall be +20 ± 3 higher than the rail steel.

Metallographic Examination
Macro Structure - the objective of this inspection is to determine whether the area where casting operation is conducted has a fine and flat grained structure.

Micro structure - the structure of the weld steel and rail steel shall consist of grains of equivalent size and the structure shall be perlitic like rail steel.

Chemical Composition
Chemical analysis shall be performed at least 5 mm distant from the transversal central line on the bearing surface of the weld. Chemical analysis results shall be within the stated limits.

WELDED RAIL	CHEMICAL COMPOSITION (%)				
	C	Si (Max)	Mn	P (Max)	S (Max)
60 E1- 900 A	0,50-0,75	1,20	0,70-1,40	0,035	0,035

5.11. Acceptance criteria of aluminothermic welding

5.11.1. Specifications for alluminothermic welding

Alignment of the running surface

The running surface (top) must be aligned so that when the 1m straightedge ruler is placed centrally over the gap, each end is 1.8mm above the running surface.

Fastener clips must be removed from one or two sleepers either side of the gap.

A wedge must be placed between the sleeper plate and under the foot of the rail in order to lift the rail to the correct peak, without twisting the rail,

A steel wedge must be used between the foot of the rail and the lug in the concrete sleeper to obtain the correct alignment of the face. The alignment must be checked with the straight edge.

The maximum mismatch of the rail foot that can be accommodated by the moulds is 5mm vertically and 0mm sideways.

Fitting moulds to rail

General

The moulds must not be wet or badly cracked. (Some very minor surface cracking is normal and this should not affect the weld). If any significant indentations are present in the back of the mould up towards the top half then it should not be used. If the mould has been wet, normally it would show a white powder on the mould surface. A slight dusting is not uncommon due to moisture in the atmosphere but if it is excessive the mould cannot be used. If the cardboard carton has been wet which would indicate that the moulds are wet or were previously wet, then the moulds must be discarded.

Mould fitting

The moulds must be attached to the rail in a proper way. When, upon examination, rubbing marks can be seen over the whole mould contact surface and the mould fits closely by sight, then the dust is removed from the rail and mould and it is fitted to the mould protector. The maximum mismatch that may be welded is 5mm.

Biscuit

The biscuit is a rectangular block of mould material that is placed in the mould after the mould has been preheated and is used to direct the molten portion to the rail ends during the pour. The biscuit must be put on top of the luted moulds with the bottom of the biscuit clear of, but as close as possible to, the outside edge of one of the riser holes. The flames escaping from the riser hole during the preheating will dry out the bottom of the biscuit.

The Crucible

Cleaning and examination of the crucible

The crucible lining must be kept clean in order to clear the throat and maintain a good conical shape, using the square cleaning rod and/or a 2kg hammer for a complete cleaning. After cleaning, the throat and the

general crucible shape should be examined to ensure that: the thimble will seat properly in the throat and a seal will be formed, the thimble will not be seating too high thereby retaining weld metal in the bottom of the crucible and/or tapping early due to the excessive exposure to heat, the crucible is not excessively belled which increases heat loss and causes excessive heating of the outer shell.

Preheating of the crucible

Before the first weld on any shift, as soon as the crucible is suitably cleaned and examined, it must be preheated for 20 minutes to remove moisture and to reduce the thermal shock experienced when the portion is reacting. This is done by directing the preheater flame into the crucible either from the top, balanced on the square cleaning rod, or, preferably, by laying the preheater on the ground and placing the upturned crucible over it. A soft preheat flame is used for 30 minutes for drying out a new crucible but a used crucible requires a soft flame for only 20 minutes.

Setting up and loading the crucible

The crucible must be placed on the rail clamp empty, then lined up, then loaded with the thimble and charge. The closing charge must be applied so that form a seal around the thimble so that no leakage occurs between the thimble and the crucible throat. Charge must be suitable for the type of rail, the material will be poured into the crucible. Any charge partially used and not properly sealed must be discarded. The container of ignition tapes should be kept close at hand in case another is needed when attempting to light the portion after the preheat.

Preheat

Correct preheat is determined by using correct gas pressures and correct heating times. For a satisfactory weld to be produced the 10mm of each rail end protruding inside the moulds must be melted into the weld metal to ensure good penetration is achieved into the adjoining parent rail. Sufficient heat must also be put into the rail before and during the weld to prevent a fast cool down which could result in a brittle Heat Affected Zone being produced. The gas pressures used determine the amount of heat put out by the preheat flame, where the hottest part of the flame is and the type of flame e.g., oxidizing, neutral etc.

- The oxy regulator used must be a dual stage to maintain an accurate flow rate during preheating.
- Hoses must have 10mm inside diameter.
- Hoses more than 20 metres in length must not be used.

The height of the preheater must be checked before fitting the moulds and adjusted to the correct height for the process.

After the preheater is correctly adjusted the risers must be inspected to see if the ere are any large pieces of luting etc. These must be removed by breaking them up carefully with wire so they will be blown out.

Lighting the charge

Prior to lighting the charge, the immediate area must be checked and any flammable material must be removed, taking note of wind direction and strength. All personnel standing within 10m of the weld must were protective masks. When the preheat is complete the preheater must be removed. The biscuit has to be

placed in the centre of the mould using tongs. Swing the crucible around and line it up. The portion must be immediately lit to prevent excessive heating of the crucible, which could result in an early tap.

Pouring the weld

After the reaction is complete (within the range 18-28 seconds from when the portion was lit) and after portion has settled (a further 5-15 seconds), the thimble should tap cleanly and allow the weld metal to pour from the crucible over the biscuit into the mould. Monitor the reaction and settlement time from lighting the portion to the pouring of the weld, and whether the reaction was complete when the thimble tapped.

When the weld metal has poured from the crucible the timer must be set to the cut off time for the weld. Three (3) minutes after the pour the slag trays can be removed. Approximately ½ a minute before the due cut off time, the mould protectors and rail clamp should be removed. The slag tray may be removed earlier provided care is taken to avoid disturbing the weld before it is solid.

Removing Sand Mould

When the timer indicates that the cut off time is up, the top of the moulds should be broken off onto the shovel and placed in the mesh skip. If the weld metal is still liquid when the mould is broken off, the mould should be replaced for a short period of time, say 15 to 20 seconds before trying again.

Trimming The Weld

After the risers are both cut, using a hammer or jimmy bar, bend them away from the rail to about 45º and leave them connected until the weld is cool. When cold, the risers can be removed by tapping back toward the web.

Semi-Finished and Rough Grinds

Soon after the excess metal is cut off the rail profile grinder should be used to "rough grind" the weld. This is done to minimize the stress applied to a hot weld and therefore is especially important if a train is expected soon. Trains may pass over new welds after 20 minutes.

Disturbing The Weld

After welding one end of a closure, it is not allowed to carry out any rail pulling, vibration or other work which may disturb the weld for at least 20 minutes after the excess head metal has been removed and the semi-finished grinding of the weld. Likewise, if the rail gap is being held by rail tensors during the weld, the tensors must not be removed until 20 minutes after the excess head metal has been removed. If there is any indication that the rail may have moved during this time, the weld must be replaced. Welds must not be final ground until they have completely cooled. A specially designed rail profile grinder is to be used.

5.11.2. Aluminothermic welding acceptance criteria

General rules

1. Welder's authorization certificate and welding records shall be submitted by the Contractor to the DGII/Employer.
2. Welding work shall be fully completed, marked accordingly, cleared of mould and seal residues, fixed in the final position and ready-ground.

3. The length of grinding area shall be max. 500 mm. in both sides.
4. Vertical deflection shall be measured in the axis of the running surface. The value of the peak point P shall be calculated by using (h1+h2)/2 formula.
5. Vertical direction is measured 14 mm below from the upper edge of the rail in the running edge.

Accepted values

On the vertical bearing surface + 0,3 mm -0,1 mm

Lateral surface of the heads + 0,2 mm -0,1 mm

a) The quality of welding is determined by means of visual inspection and ultrasonic test. In the visual inspection:
b) The weld shall be casted in accordance with the mould shape and shall not be deformed.
c) No damages or stains arising from effluent or splashed liquid iron shall be on the rail.

Testing and approval of the welding operations to be carried out with termite material

Operation approval shall be conducted for each termite material lot separately by testing the welding samples manufactured in accordance with these standards. It shall be performed in a laboratory authorized to carry out these tests and the report with results shall be delivered to the Engineer.

Fatigue test
It shall be performed on a 1,30 m long termite-welded welding sample.

Static bending test
Applied force subject to fatigue test is increased until the rail is fractured and the fracture load is determined. The deflection amount of the rail before cracking shall be at least 15 mm and its fracture load shall be minimum 120 tones.

Hardness test
In order to determine the welding hardness; standard Brinell Hardness Test is performed on 3 different points which are located 10 mm away from each other on the bearing surface of the welding. Arithmetic mean of the Brinell Hardness values obtained from these tests is accepted as the Brinell Hardness of the weld in question. Brinell Hardness value of the welding shall be between 278 and 327.

Macro and Micro examination
Macro structure: The objective of this inspection is to determine whether the area where casting operation is conducted has a fine and flat grained structure.

Micro structure: The structure of the weld steel and rail steel shall consist of grains of equivalent size and the structure shall be perlitic like rail steel.

Preparing the test result report
Tests which shall be conducted in a laboratory authorized to carry out these tests and approved by the Engineer shall be inspected and the report including the results shall be delivered. This report shall cover the profile drawing of the rail included in ANNEX B if the rail is fractured and the results of the tests

between 1 and 4 including the pictures of the fractured surfaces of all fractured test sources (one for each sample), the chemical analysis of the rail and the records of the Contractor.

5.11.3. Marking of the welds

Each aluminothermic weld shall be marked. A 3x5 aluminum plate shall be used for marking operation and this plate shall be glued in a place close to the welding area (maximum 30 cm away from the welding area, on the rail bottom or rail body). Marking of aluminothermic welds shall be performed independently of both stations with station tracks and switches belonging to each station as follow:

Letter "M" for switch area, letter "A" for main line, letter "I" for station tracks and letter "MS" for the diverging railroads of the switch area shall be used. After these letters, "-" (hyphen) shall be used. Letter "K" for the northern track (the line to the north), letter "G" for the southern track (the line to the south), normal letters "K" and "G" for the main tracks in the station tracks, "K1" for the Northern 1st track and "G1" for the Southern 1st track. This series shall be continued for station tracks (K2, K3, …, G2, G3, …). After these letters, "-" (hyphen) shall be used.

Odd numbers for the northern sequences (the sequence in the north of the line) and even numbers for the southern sequences (the sequence in the south of the line) shall be used.

NOTE: Weld numbers shall increase starting from zero between both stations or each switch according to the increase direction of kilometer. Numbering within the station shall start from zero as well.

Example

(For termite welding)

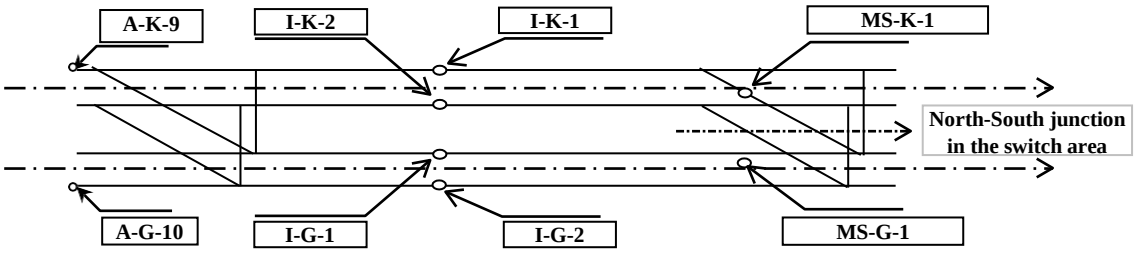

Information to be included in the aluminum plate is as follows:

1 – Region, Station or Switch

2 – Welding number

3 – Welding Kilometer (together with meter, such as 150+234)

4 – Production year

5 – Producing firm

5.11.4. Ultrasonic test

Calibration of ultrasonic device:

Reference reflector diameter shall be 3 (three) mm in the test rail prepared for the inspection of 60 E1 rails.

The personnel who shall perform ultrasonic tests:

The personnel who shall perform ultrasonic tests shall have "EN 473 – level 2" certificate.

Examination of welds:

Each finished weld shall be ready for ultrasonic test after undergoing honing and dimensional tolerance inspection. Of the butt welds prepared by machine, first 300 welds which have been welded first and are ready for examination shall be tested by ultrasound. If no fault is found one weld out of every next 100 welds shall be tested. In the event any fault is fault is found as a result of these tests 100 welds which have not been inspected shall be tested as well. All termite welds and heat-treated machine welds shall be examined by ultrasound.

Welds which do not comply with the dimensional tolerance as a result of the inspections may be heated up to 2000C and corrected. All welds which have undergone cold or hot mechanical correction shall be tested by ultrasound.

5.11.5. Certification

For each weld, the records shall be kept for minimum five years and brought into the use of the Engineer in the event of faults are found: Weld marking and its place, weld parameters monitoring production bending test results, rail alignment data.

5.11.6. Equipment

Equipment shall be in conformity with operating manual. The requirements of examination and calibration equipment determined under the agreement reached by the Contractor and the DGII/Employer shall be fulfilled. The Contractor shall keep the measurement- inspection instruments (gauge, feeler, etc.) calibrated during inspections ready. After the inspection of each 500 welds, the measurement-inspection instruments (gauge, feeler, etc.) shall be calibrated.

Note: All rails and switches on the railway track shall be welded and no fish plate joint shall be left unless authorized by the DGII/Employer.

5.12. Machine rail butt welding

5.12.1. Scope of works

These specifications specify the welding requirements regarding the welding of rails by Mobile Butt-Welding Machine ("MBWM"), conditions for the approval of welds and the machine, technical specifications of rail butt welds, acceptance requirements and general conditions.

5.12.2. Quantity

Approximately 5.2 km double track rail butt welded in IMT section.

5.12.3. Rail and line characteristics

- Rail profile: 60 E1
- Rail quality: 900 A
- Sleeper type in accordance with 60 E1
- Connection type W14 Elastic Connection System.
- Distance between sleepers 600 mm
- Maximum cant 130 mm
- Maximum gradient %o 12.5
- Sleeper Rail bearing area gradient 1/40

5.12.4. General conditions

Losses and damages which may occur during works

During the works, the Contractor shall not damage the railway line and facilities, underground and aboveground electrification, signalization and telecommunication lines, station protection systems and energy and water installations, where applicable.

In case of any loss, damages shall be repaired by the Contractor within the shortest time.

Continuous rail formation shall be applied to remove rail joints and prevent rails from being subject to excessive thermal tensions in order to form rails as long as possible within limits defined in relevant Technical Specifications.

The necessary measurements shall be taken in order not to damage plastic plate pads and other connectors during the shrinking of rails as a result of rail elongation due to welding and plate pads shifts and position alteration shall be prevented. To this end, if necessary, adequate amount of antifriction pulleys shall be placed under rails while long rails shall be shrunk.

Sleepers and superstructure materials whose positions have been altered during welding operation shall be restored according to the technique.

All kinds of measures shall be taken against fire which may break out during welding.

Remaining materials on the track shall be collected and handed over to the DGII/Employer.

5.12.5. Welding operations

General

All welding operations shall be carried out automatically by using programmable MBWM to be used in welding operations.

Basic Requirements of MBWM

Clamping force
Rails shall be fixed my means of an appropriate clamping system in MBWM. The shape and profile of clamping shoes shall be selected in such a way that no damage or crack shall occur on rails when force is applied.

Preheating flashing
Throughout the process, heated area surfaces shall advance uniformly and vertically in parallel with the rolling axis.

During preheating-flashing, no sign of overheating shall be seen at rail ends. Once commenced, there shall be no interruption in the process of flashing.

Upsetting
Upsetting shall be executed immediately after flashing. Adequate pressure shall be applied in order to fill in the blanks and remove oxides; thus they shall be kept in weld interface at the minimum level. Weld interface shall extend over the middle of upsetting.

Unclamping
In order not to alter the axis of two rails, clamping shall be unclamped minimum 4 seconds after the completion of upsetting operation.

MBWM welding parameters and records
Welding operation parameters which shall be included in the operation procedure.

Welding machine and/or inspection system hardware shall be able to show the following:

a) Determination of welding operation parameters and adjustment details;

b) Welding current;

c) Upsetting force or pressure;

d) Displacement

e) Welding period

Welding operation parameters shall be monitored and recorded by the Contractor. These records shall be the base for the weld approval of the Engineer. Welding operation parameters shall enable that weld production takes place without any change in the program at -10ºC or higher temperatures. Due to various rail heats, changes in pre-heating parameters shall be considered as changes in welding operation parameters.

Basic welding requirements

Excess in welding area

Excess size in the welding area which has been welded, stripped and rough-ground shall not exceed the sizes specified in Table 1. Inspections shall be conducted by the gauge shown in figure sets of gauges needed for inspections shall be supplied by the Contractor before commencing production and handed over to the Engineer for approval.

Location of the excess on the rail	**Maximum permissible excess**
Vertically on the central line of the bearing surface	0,5 mm
Horizontally on the aligned edge or top 14 mm below the head	0,5 mm
Horizontally at both edges of the rail base	2,0 mm

Table 1 — Maximum permissible excess

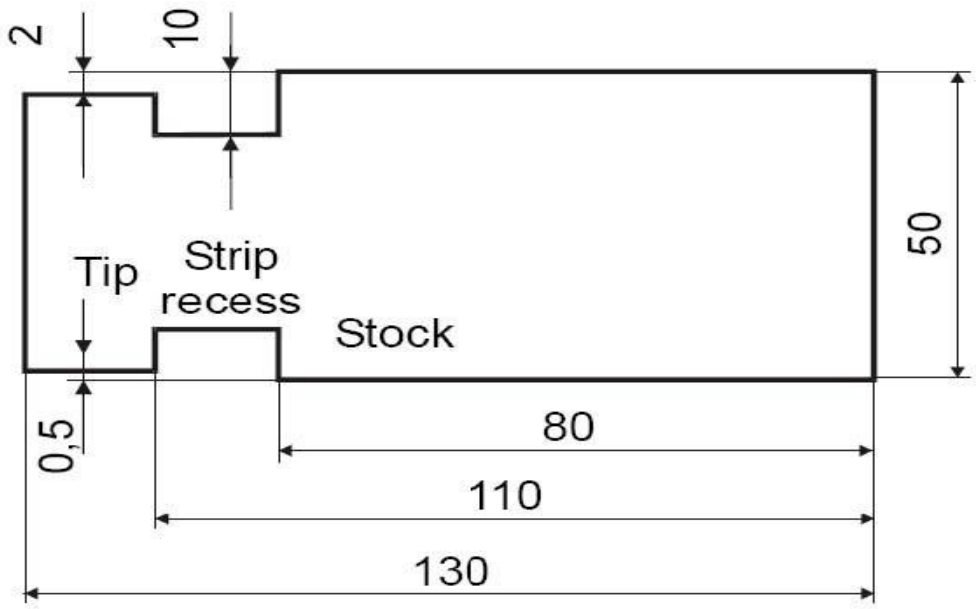

Figure 1 — Gauge for measuring the excess (sizes in millimeter)

Weld Stripping

Excess metal on rail profile shall be removed by being stripped automatically.

While the excess metal is being stripped, welding area should be under pressure.

While the excess metal is being stripped, temperature of the welding center shall be over 500oC.

During and after the excess metal is being stripped, no mechanical defect or any defect depending upon temperature shall be allowed in rails.

There shall be no visible crack in the stripped area.

Any grinding to be performed in the weld following stripping shall not result in any damage in the rail or weld and shall not make the rail go down below the value of the standard profile.

The quality of the stripping operation performed on the underside of the rail base shall be regarded. No defects such as dents, cracks, etc. shall occur in the rails on weld sides as a result of stripping.

Thickness of the excess metal following welding operation is specified in Table 2. Thickness of excess metal after welding operation and rail profile shall be measured in the highest area. In the event that the excess metal sizes after welding operation are above maximum values, this area shall be ground until reaching the necessary values without damaging the main rail.

Area	Location of stripping area	Maximum permissibleexcess
1	The whole head area from the beginning of the head lowercurve to the lower curve on the other side.	2 mm
1+	The area between the head lower curve and the beginning ofthe body area.	2,5 mm
2	The area from the starting area of the body to the startingcurve of the rail base.	2 mm
3	The whole area from the rail base starting curve to the railbase edge.	2 mm

Table 2 – Excess metal thickness permitted after stripping (sizes are in millimeters)

Waste material and clinker arising from stripping shall be collected in an appropriate cup and removed from the line.

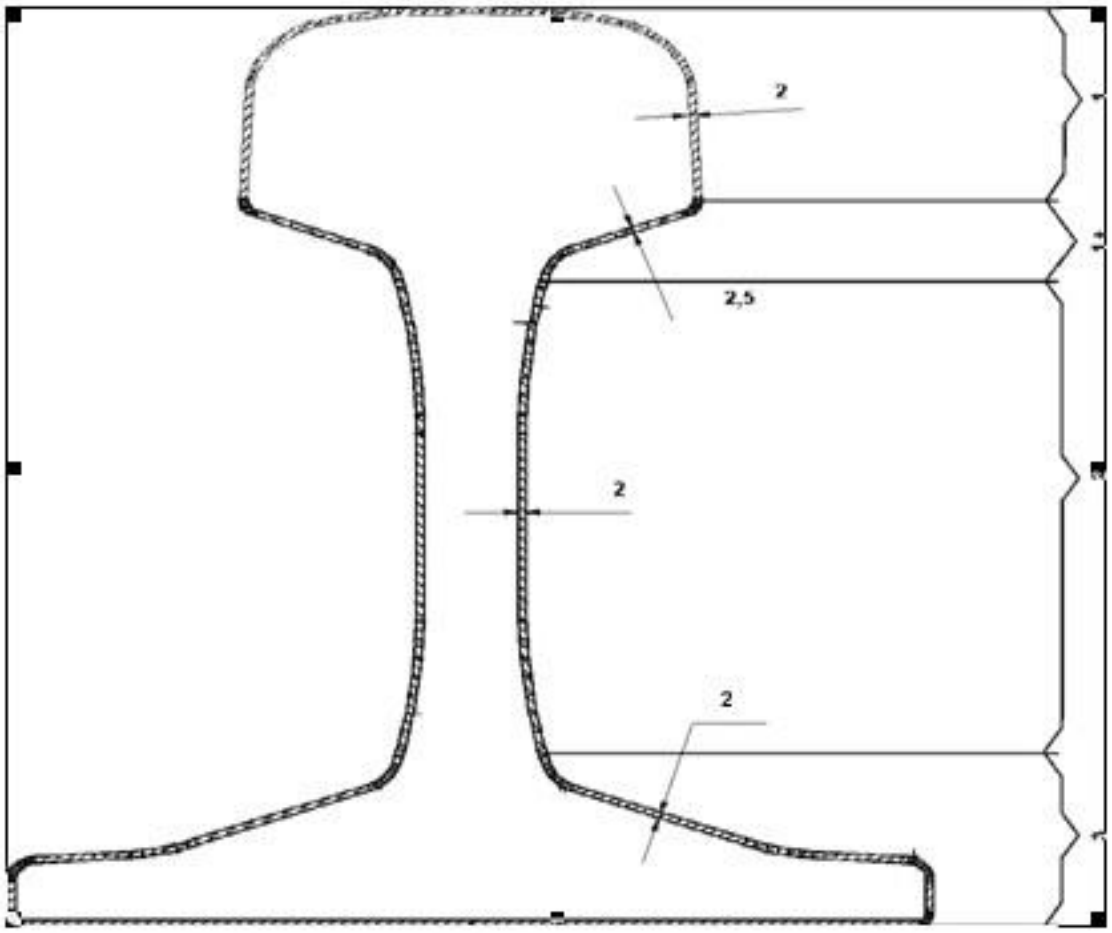

1 Area 1 – Rail head

1+ Area 1+ - Area under the head

2 Area 2 – Rail body

3 Area 3 – Rail base

Figure 2 — Maximum permissible stripping sizes

5.12.6. Acceptance conditions

5.12.7. General

The Engineer, where required in accompany with DGII/Employer, has the right to follow the work method, participate in all tests on finished welds and inspection the results obtained from these tests.

The Engineer and DGII/Employer have the right to conduct all inspections necessary for guaranteeing the compliance of welding operation.

Acceptance and approval process

General

Acceptance and approval process shall be executed in two stages.

First stage covers the approval of MBWM before commencing welding operation in the line and the procedures of permitting welding operation in the line.

Second stage covers the procedures of inspecting and acceptance of the welds made by MBWM approved.

MBWM Approval Procedures

General

MBWM approval procedure shall be actualized by subjecting the samples of the welds to be made by the Contractor using the machine and operation procedure specified in requirements in accredited laboratory.

Welds to be subjected to these examinations and tests shall be made in the rails having R260 (900A) quality and in EN 60 E1 rail profiles.

Unused rails of adequate quantity and length shall be handed over to the Contractor by the DGII/Employer to be used in the production of these welds.

In the event that tests and examinations meet the value set forth in the specifications, an approval report shall be prepared by the Engineer. This report shall include operation procedure and operation parameters as well.

In the event that any of the tests and examinations fails, the Contractor is entitled to require a second approval process by changing its operation procedure and parameters.

All examinations and tests shall be carried out in the second approval procedure as well. In the event that all examinations and tests meet the values stated in the specifications at the end of the procedure, a report shall be prepared in as mentioned above and MAMK shall be approved.

In the event that any of the tests and examinations fails at the end of the procedure, the test procure shall be repeated by the Contractor.

MBWM approval procedures tests and examinations

All approval tests and examinations shall be performed in accredited laboratory. The Contractor shall submit the report involving test and examination results to the Engineer. Examinations and tests shall be carried out according to the order given below; in the event that any test and examination gives negative results, approval procedure process shall be regarded as negative without proceeding to the next examination or test.

Visual examination

All weld samples to be prepared for approval and examination shall undergo visual examination against defects such as thermal damages especially in electrode contact areas, and tears and shrinkage that may occur during clamping, flashing and upsetting during operation. In the event that any such defect is detected in any sample examination shall be regarded as negative.

Examination of the excess metal after welding

This examination shall be conducted on welded and stripped samples and the excess weld remaining in the weld area after stripping shall be examined. Values obtained as a result of this examination shall be in conformity with relevant standards. In the event that excess weld is out of the given value examination shall be regarded as negative.

Excesses around the weld

2 welds shall be made for this examination. These samples shall be stripped and examined as rough- ground.

Penetration test

Weld samples which have been welded, stripped, brought to profile by grinding shall undergo a penetration test in accordance with EN 571-1. There should not be any cracks in the welding area and electrode contact areas. If any, examination shall be regarded as negative.

Macro examination

Four weld samples which have been welded, stripped, brought to profile by grinding shall be prepared. A section shall be taken from all these samples for micro examination and samples shall be prepared under ANNEX C and the examination result shall meet the following requirements.

The shape of the area which has been visually affected by temperature shall be nominally symmetric around weld axis and have a width between maximum 45 mm and minimum 20 mm. Deviation between the maximum and minimum dimensions of the area which has been visually affected by temperature shall not be above 20 mm on any weld. This condition shall apply equally to both vertical axis sections running through the whole rail deepness and the ones taken from rail base;

There shall not be any indication of adhesion lack, crack or shrinking. Deficiencies which can not be detected precisely by macro examination shall be examined by micro examination;

In the event that stains are detected on surfaces during the visual examination of ground surface, the stains in question shall be inspected by undergoing a micro examination of 100x magnification. The process shall be rejected if any crack is found.

No embrittlement shall occur due to welding, cooling and grinding.

In the event that any sample does not meet the requirements, examination shall be regarded as negative.

Micro Examination

Following the completion of macro examination, a micro examination shall be performed on all macro-examined samples under ANNEX C. In the examination of 100x magnification, no martensite or bainite shall be seen in the area which has been visually affected by temperature. In the event that such structures are encountered, examination shall be regarded as negative.

Hardness test

Sections shall be taken from the four weld areas taken for macro and micro examination and two of them shall undergo a hardness test to be conducted as per ANNEX D. Maximum and minimum hardness degrees obtained shall meet the following:

Minimum hardness shall not be below P - 30 HV30 value; Maximum hardness shall not be above P + 60 HV30 value; Here, P = average hardness of the main rail.

If any sample does not satisfy the requirements, test shall be regarded as negative.

Bending test

4 welded and just stripped weld samples shall be prepared and all of these samples shall undergo a bending test as per ANNEX A.

None of the weld samples should break, crack, etc. under the load specified in ANNEX A and it should be proved by a penetration test to be carried out after this test.

If any weld sample does not satisfy the requirements, test shall be regarded as negative.

Fatigue test

1 weld sample which has been welded, stripped, brought to profile by grinding shall be prepared and all samples shall undergo a fatigue test as per ANNEX B. If any weld sample does not satisfy the requirements specified in ANNEX B, test shall be regarded as negative.

Procedures regarding permitting welding on the line

After MBWM approval, the Contractor shall make 30 welds on the line in the section where welding operation shall be carried out.

The Contractor shall be permitted to execute welding operation on the line if the welds in question satisfy the given requirements. In the license to be issued, numbers of the welds examined and examination results shall be included.

If any weld sample does not satisfy the requirements, the Contractor shall make an additional 30 welds. The agreement shall be terminated in the event these weld samples do not satisfy the desired requirements; if they do, a license shall be issued and the Contractor shall be permitted to execute welding operation on the line.

Technical requirements, acceptance and inspection procedures

General

In Situ preparation of rail ends

If there is a fishplate hole which is close to the rail head more than 100 mm or rail heads are crushed or worn, they shall be cut.

Rail ends shall always be sawed or cut with the help of a disc and surface tolerances shall be within the sizes specified in Figure 3.

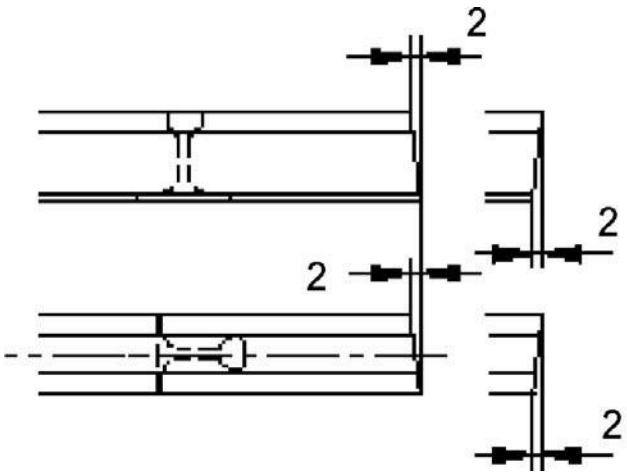

Figure 3- Tolerances of rail section uniformity (dimensions are in mm)

Rail adjustments
Rail adjustment shall be performed on the base of inside discs to prevent transition deficiencies in the section of the rails to be welded which shall be inside the line after welding.

Monitoring welding operation parameters
Approved welding operation parameters shall be used during welding. For all welds to be made, welding operation parameters should be automatically monitored and recorded.

Profile Grinding of rail Head

Rough Grinding

In the event that the upsetting in the rail head is above 0.50 mm, excess upset in the rail heads of all welds produced shall undergo rough grinding in such a way that there shall be maximum 0.50 mm on the rail surface.

Honing

After welds are made, rail connectors shall be tightened before honing. Rail head shall undergo profile grinding and grinding dimension shall have the shortest possible length and not exceed the limits specified in Table 3. If necessary, correction of weld geometry shall be carried out by pressing. Profile grinding shall not result in any thermal or mechanical damage in the weld or rail. During profile grinding, profile of the rail head (contour) shall be maintained.

All kinds of pressing operations shall be conducted only if the rail temperature is below 2000C. Exterior surface of the rail head shall be ground in accordance with the profile.

In case of any rejected weld during Weld Inspections, if the rejected weld is located in between, it shall be cut, an isolated rail shall be placed in between and the welding operation shall be repeated.

The isolated rail used shall be minimum 10 meters.

Geometrical acceptance criteria
Following pressing and profile grinding, uniformity of the welded gasket shall be measured vertically and horizontally with the help of a 1-meter gauge.

Horizontal uniformity of the head shall apply only for wheel contact surface. Any deviation shall be in conformity with Table 3 in ambient temperature.

In any measurement performed when the weld is hot, that is right after profile giving, the effect of cooling on the weld shall be taken into account in such a way to stay within the above mentioned limits.

Weld Uniformity		
On vertical bearing surface	▲ + 0,3	▼ – 0,2
Grinding length	max. 500 mm on both sides	
Lateral surface of the head	←→ + 0,3	→← – 0,2
Grinding	max. 500 mm on both sides	
NOTE: During lateral measurements, rise of arch amounts shall be taken into consideration in the welds made in transition curves and curves.		

Table 3 — Tolerances for the accuracy and uniformity of the butt welds in ambient temperature
(Dimensions are in millimeter)

Accuracy and uniformity on the weld shall be measured as follows:

Vertical uniformity on the bearing surface shall be measured between the points at a distance of 500 mm. on both sides of the weld by taking the weld central line as a reference in the longitudinal direction of the rail.

Horizontal uniformity of the weld on the rail head shall be measured on the face of rail distance which is approximately 14 mm below the surface and shall be measured between the points at a distance of 500 mm. on both sides of the weld central line.

Examinations and Tests

Visual Examination
All welds and rails shall undergo a visual examination against tears, gaps, cracks, geometrical defects and especially thermal damages in electrode contact areas which may occur during welding, stripping, clamping and grinding. In the event that any defect is detected, the weld where the defect in question is detected shall be repaired by being cut on each side at a distance of minimum 100 mm.

Geometrical inspection

All welds shall be inspected in accordance with relevant standards. In the event that any weld does not meet the requirements, the Contractor shall submit to the Engineer the work planned to be performed on the weld to meet the geometrical requirements. If the work planned is accepted by the Engineer, correction shall be carried out by the Contractor and the weld shall be re-examined. In the event that the weld does not meet the requirements as a result of the re-examination or that the work planed by the Contractor regarding weld correction is not approved by the Engineer, the weld not meeting the requirements shall be repaired by being cut on each side at a distance of minimum 100 mm.

Ultrasonic testing

Calibration of Ultrasonic device

Reference reflector diameter on the test rail prepared for the inspection of EN 60 E1 rails shall be 5 (five) mm.

Personnel to conduct Ultrasonic tests

The personnel who shall perform ultrasonic tests shall have "EN 473 – level 2" certificate.

A copy of the certificates shall be delivered to the Engineer.

Examination of welds

Each finished weld shall be subjected to an ultrasonic test after undergoing honing and dimensional tolerance inspection. The weld having negative ultrasonic test results shall be repaired by being cut on each side at a distance of minimum 100 mm.

Ultrasonic test results of all welds shall be recorded by the Contractor.

Welding Test

General

Of every 1000 welds made on the line, one weld made with EN 60 E1 rails at one line edge shall be tested. (This number may vary ±50 since test weld shall be made at the end of the day).

EN 60 E1 profiled isolated rails of 900A quality to be used in the weld sample which shall be prepared for these tests shall be handed over to the Engineer.

During the time between the preparation of test weld and the preparation of the result report after conducting a bending test on this weld, welding operation on the line shall be suspended. The time shall not exceed 3 calendar days.

If the test report is positive, welding operation on the line shall be carried on.

If the test report is positive, welding operations shall be halted and one more bending test sample shall be prepared by the Contractor by making the necessary corrections in the welding operation parameters on the day when the report is received.

Total delay time for each 1000 welds shall under no circumstances exceed 10 calendar days.

In addition to routine test, a bending test sample shall be prepared and tested in accordance with relevant standarts. If the test result is positive, welding operation on the line shall be carried on. Conditions regarding routine test shall apply for delays which occur in such cases as well.

a) Immediately after recovering the failure in the welding machine;

b) Immediately after handling and repair works which are out of regular maintenance operations;

c) If a new procedure is commenced and this procedure has not been employed in the previous 4 weeks.

Bending Test

Test shall be carried on in accordance with ANNEX A. In weld production tests, minimum bending test loads and the relevant requirements shall be in conformity with ANNEX A. Records of the applied load and deflection shall be kept and the records in question shall include rail profile and quality, welding date and the reasons for testing.

In the event that the test does not fulfill the requirements, it shall be regarded as negative.

5.12.8. Other matters

Measurement Instruments

The contractor shall keep the measurement-inspection instruments (gage, feeler, etc.) calibrated during inspections ready. After the inspection of each 500 welds, the measurement-inspection instruments (gage, feeler, etc.) shall be calibrated.

Guarantee

All welds on the line shall be guaranteed by the Contractor for 3 years as of the date of welding. DGII/Employer shall immediately intervene in case of broken weld/welds;

In the event that any instance such as derailment, etc. occurs on the track due to a break in the weld or the line closure period to be given during weld renewal, the Contractor takes the responsibility. In case of any damage, damages shall be repaired by the Contractor as soon as possible.

ANNEX A: Bending test criteria

Bending test shall be performed by the bending test equipment given in Figure A.1. Values are given in millimeters.

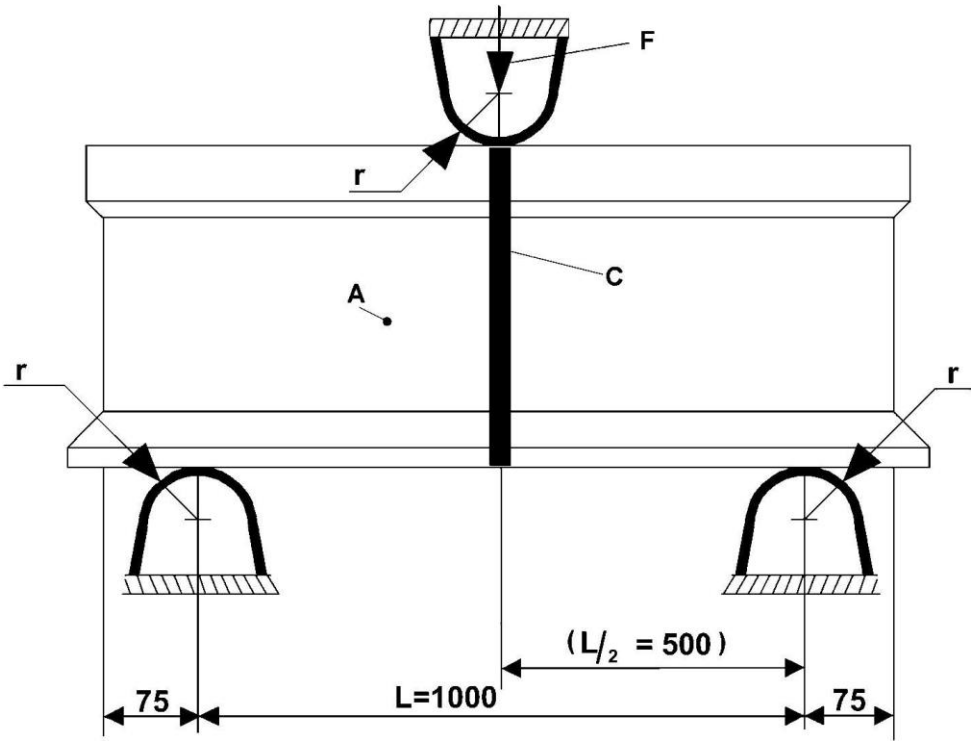

F Force

A Rail

C Weld

NOTE 1: r:25 mm to 70 mm

NOTE 2: loading speed (40 – 120) kN/sec

Figure A.1 — Bending test equipment

Rail Profile	Minimum bending test deflection (mm)	Minimum bending test force for approval and production (kN)
	900 A (R260)	900 A (R260)
EN 60 E1	20	1600

Table A.1 — Minimum bending test requirements

ANNEX B: Fatigue test

Testing equipment

Tests shall be performed with bending in four points while the rail base is tight.

Interior width (W) shall be minimum 150 mm. Exterior width shall be above the interior span and at least twofold of the rail height and symmetrical around the interior width.

In case of any dispute, the requirements shall be in conformity with the fatigue test theory:

- $W \geq 2H$ + weld neck width
- $L \geq W + 2H$"

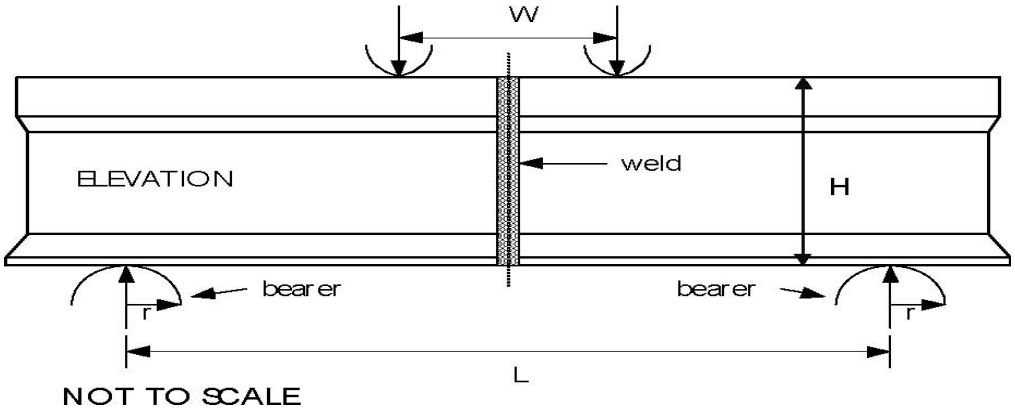

Figure B.1 — Fatigue test equipment

Interior and exterior widths shall be measured and recorded.

Distances from the central line to the loading points of the activator shall be measured and recorded. Difference between the dimensions corresponding to it on both sides of the activator central line should not exceed 3 mm.

Radius of the loading points curve shall not exceed 40 mm. Loading points contact surfaces shall be available to transfer or rotation in such a way to minimize the friction between loading points and samples.

Test parts

Weld center shall be located as ± 10 mm at the center of the test equipment. Length of the test part shall not be 100 mm above L support length.

Procedure

Locate a test part in the test equipment in such a way that the weld central line shall be aligned to the activator central line at a distance of 3 mm.

Maximum applied tension is shown in Table B.2. Minimum applied tension shall be 10% of the maximum applied tension. No error is accepted in strength below the value of 5 Mc.

Example: If the tension range determined when the ratio of the minimum applied tension to the maximum applied tension (R) is 0.1 is 190 MPa, then the maximum tension shall be 190/(1 - R) = 211 MPa.

Rail quality	Maximum tension applied MPa
900 A (R260)	190

Table B.2 – Fatigue test requirements

Cyclically apply load on the weld using a sinusoidal wave in such a way to reach maximum and minimum tension values. Both values shall be continued until a 2% difference to the required nominal value. Keep on applying cyclic tension until the test part is broken or crack formation or 5 Mc is applied. Test result shall be recorded as "unsuccessful" if the test part is broken or cracked before 5 Mc or as "successful" if no break or crack occurs.

Information to be stated

The following shall be reported for each test series:

- Interior and exterior width of the test equipment (B1.1),
- Applied tension
- Cyclic force number if any break or crack has occurred
- The place where crack starts in case of any break or crack,
- Whether the test result is "successful" or "unsuccessful".

Acceptance criteria

If any break or crack occurs before 5 Mc value in any test, it shall be regarded as "unsuccessful".

ANNEX C: Macro and micro examination

Macro examination

A longitudinally vertical section shall be centrally taken downward from the vertical axis of the rail and stretched for 60 mm towards the both sides of the fusion line. Similar sections shall be taken from both sides of the base, 10 mm inside of base ends. By using a sander having minimum 220 grids, sections shall be polished until reaching an appropriate finish. One full rail depth sample and the relevant rail foot samples from both samples shall be seared for the purpose of showing weld boundary lines. In case of any dispute, FRY searing method shall be used.

Searing agent shall have the following chemical properties on the base of 10 liters: 1,875 kg copper chloride (CuCI2. 2H20); 5 liters hydrochloric acid (HCI 1,18 ml - %35); 4,2 liters distilled water.

Searing operation at room temperature shall be conducted for an adequate time period so as to ensure that boundary lines are clearly seen during examination.

Micro examination

Microscopic examination shall be performed on the samples taken from the sections where head (one sample 20 mm x 20 mm) and base (two samples 10 mm height x 20 mm) are cut from two of four welds. Samples shall be seared in 4% searing agent.

ANNEX D: Hardness test

Two finished welds shall be cut for hardness test. A longitudinally vertical section shall be taken downward from the vertical axis of the rail head and stretched for approximately100 mm towards the both sides of the weld.

Hardness difference in the areas affected by heat of both welds shall be measured by using Vickers hardness test as per EN ISO 6507-2 and in accordance with the following parameters:

- HV 30;
- Marks shall be on a line located 3 mm and 5 mm below the longitudinally vertical axis of the rail. Distance shall be in 2 mm centers.
- Hardness diagonals shall be stretched at least 20 mm from the weld into the rail which has not been affected towards the points on both sides of the weld.

Obtained measures shall be recorded graphically and numerically.

5.13. Fencing

Fencing is designed as type sections according to the places they will be applied including the track side, station and residential areas.

Fencing to be used along the line shall be constructed in line with the given in the drawings.

Compliance with the specified conditions (quality control tests, material types, etc.) shall be submitted to the Engineer.

Compliance of the fencing, construction of which are completed, to the type project shall be visually inspected.

Appropriate sections shall be reported. Contractor shall provide the protection of fencing until it completes the acceptance procedures.

5.14. Protective rail grinding

5.14.1. Scope of works

This technical specification shall determine the technical criteria for reporting, measuring and realizing protective grinding on high-speed railway lines (including switches) in order to re-profile the rail for optimal wheel-rail contact by cleaning the corrugation on rail and other rail defects.

5.14.2. General conditions

This specification shall cover all the requirements of EN 13231-3 European Standard. The latest version of EN 13231-3 and EN 13231-4 European Standard shall be applied to this specification for the work to be carried out within the scope of this specification; for the control of this work; for equipment used for control and confirmation of this equipment; for acceptance of work; and for other issues specified in the standard, unless stated otherwise.

At the beginning of the work, the Contractor shall have manufacturer provide free training to administrative personnel regarding the general working principle of the machines to be used in protective rail grinding process; their technical features; their graphics-measurement-reporting systems and their interpretation.

2 profile testing devices which can measure rail and wheel profile including switch rail and stripping thickness after welding and welding alignment with laser technology (contactless), shall be delivered to the Employer/DGII together with their all equipment. Testing device shall have hardware which ensures the instant evaluation of results and their transmission. The device shall be delivered with all software in which measurement evaluation has been made. The device to be used for the measurement of profile after grinding shall be approved by European Railway Administrations and its reference documents shall be submitted to the Engineer. Theoretical and practical training regarding the use of the device shall be provided by the manufacturer.

The Contractor shall have the manufacturer carry out the works regarding the calibrations of all machines, devices and equipment to be delivered within the scope of the Project, regarding their repair in case of damage, regarding their annual maintenance etc. until a final acceptance.

5.14.3. Features of machine

Machine shall have at least 20 grinding wheels and those wheels shall make grinding by circling.

Machine shall be self-driving and be able to operate day and night on its own.

It shall be able to operate on electrified lines without power interruption.

Machine shall be able to operate on sections with multiple line without disrupting the traffic on the other line.

Before starting the work, the Contractor shall submit the type, technical features, capacity and calibration documents of the machine and equipment to be used for the measurement for the approval.

Machine shall have a dust collection unit.

Machine shall have a high pressure water spray system. This system shall be used for keeping the line wet against fire before grinding and for cleaning rails and fastenings after grinding. During the grinding operation, rail temperature shall not exceed 3500 C.

The system having a fire extinguishing equipment in the machine shall be explained in detail.

5.14.4. Grinding operation

The Contractor shall submit a report indicating the working plan of the work, equipment to be used, working method and etc. for the approval.

On all line sections to be grinded, for the detection of the faults and depths on the rail surface before starting the grinding operation;

Rail profile shall be measured and recorded by measurement device of transversal rail profile once in every 500 m and in every switch (from 3 points),

Rail surface shall be measured by the measurement device of longitudinal rail profile on the whole line to be grinded,

A visual inspection shall be made on the whole line to be grinded and all measurements shall be recorded and submitted to the Engineer.

A "Working Report", which includes the following issues, shall be drawn up at the end of every shift (working period) and signed by the Contractor and the Engineer:

- Date
- Track Section
- Km
- The number of Passes
- Grinding time
- The length of the section in which the grinding operation is completed
- Beginning and ending time of the work

- The speed of the rail-grinding train
- Various subjects: Unpredictable situations, rail defects and etc.

The cContractor shall submit the final reports regarding to the transversal and longitudinal grinding operations to the Engineer.

5.14.5. Grinding tolerances

The Longitudinal rail profiles

The quality of the longitudinal rail profile after grinding shall be Class 1 quality in accordance with EN 13231-3 Standard.

Longitudinal profile testing shall be performed right after the grinding.

The Transversal rail profiles

After profiling the rail with grinding operation, Q Class values (Table 3) specified in Article 5.3 of EN 13231-3 Standard for rail cross section shall be provided.

Measurements once in every 500m. shall be taken and recorded with Measurement Device of Cross Section. Transversal profile testing shall be performed right after the grinding.

Metal removal

The maximum metal layer thickness to be removed in order to remove the de- carbonized top layer of rail, eliminate the geometric defects in rail welding and correct the possible direction defects on the rail shall be 0.35 mm. It shall be permitted to remove the metal layer up to 0.5 mm. A micrometre that accords with EN ISO 3611 shall be used for longitudinal rail testing.

Following conditions shall be met to ensure surface quality after rail grinding operation;

- There shall not be sharp edges on grinded intermediate surfaces.
- There shall not be excessive abrasions and sharp grinding wheel marks on grinded rail surface.
- There shall not be any nicks on grinded rail surface.
- There shall not be repetitive grinding wheel marks on grinded rail surface.
- There shall not be any grinding wheel marks generating from overheating of the rail surface.

The scraped off metal shall be measured and recorded once in every 500 m with a proper and portable device.

There shall be a device for testing the removed metal on the machine to measure the thickness of the metal removed after grinding. In order to measure the thickness of the removed metal, a total of six measurements before and after grinding (6 before grinding and 6 after grinding) shall be taken on each rail from at least three points at every time and their average shall be calculated. Data collected through measurement shall be printed directly on paper by the measurement device and archived. Every measurement (to estimate the removed metal thickness for one section) shall be printed on 1 paper output.

Surface Roughness

The allowed maximum surface roughness shall be Max. Ra: 0,008 mm. (8 micron). Measurement for surface roughness shall be taken once in every 250 metres.

Maximum Width for Surface Grinding shall be;

- 5 mm for a radius of 8 mm section
- 7mm for a radius of 70 mm section
- 10 mm for a radius of 200 mm section.

5.14.6. Protective grinding of switches

Protective grinding of point switches shall be carried out by the Contractor six months after the rails started to operate.

During the grinding of the protective point switch for switch blade and stock rail along with the parts of the crossing that are not on 60 E2/E1 rail profile, features for machines with 20 grinding wheels shall not be required. Grinding of these sections shall be performed with a manual grinding machine.

Grinding of the switch blade and crossing parts shall be done in accordance with the procedure advised by the Contractor and gauges approved by the manufacturer shall be used for the inspection of the work.

For grinding of the parts except switch blade-stock rail and crossing sections and approval of the work, the latest version of EN 13231-4 standard shall be applied.

5.14.7. Acceptance procedure

The form relating to the protective grinding of new lines to be issued by the Contractor must include the EN 13231-3 standard information.

5.14.8. Cleaning

The isolated fishplates shall be cleaned by spraying water to clear metallic wastes.

Metallic wastes left on the base and the signaling equipment (magnet, treadle) shall be cleaned.

Annex- 1: Control Form of Protective Rail Grinding

TCDD
TURKISH STATE RAILWAYS
…… PROJECT

CONTROL FORM OF PROTECTIVE RAIL GRINDING

PROJECT :
WORK SİTE :
SHEET NO : DATE: …….. / ……
….. / ……..
LINE NO:

DATE:	**LINE**		**NUMBER OF (FREE PASS**	**GRINDING TIME**		**REMARKS**	**OPERATOR**
	1	**2**		**STARTING**	**ENDING**		
	KM	**KM**					

5.15. Ultrasonic inspection of butt welding of the rails

5.15.1. Scope of works

The Specifications hereby apply for the conditions, register-acceptance criteria and reporting of the visual and manual UT (Ultrasonic Test) of the flash butt welding and HAZ (Heat-Affected Zone) on the lines that are not commissioned.

5.15.2. Purpose

The purpose of this document is to diagnose the welding and HAZ defects on the rail head, web of the rail and base of the rail as a result of the visual and UT inspection performed on the rails that were jointed with flash butt welding on the lines that are not commissioned and are within the tracks of TCDD and to evaluate the sizes of the mentioned defects. Welding and HAZ shall be inspected at the rate of 100%.

5.15.3. Standards

- EN ISO 9712 Non-Destructive Testing – Qualification and Certification of the Personnel – General Principles
- EN 16811 Non-destructive testing - Ultrasonic testing – Section 2: Sensitivity and range setting
- EN 12668-3 Non- destructive testing- Characterization and verification of ultrasonic examination equipment- Part 3: Instruments
- EN 14730-1 (Annex C) Ultrasonic testing procedure for aluminothermic welds in rail
- EN 14587-2 Railway applications -. Track - Flash butt welding of rails
- EN 13674-1 Railway applications - Track - Rail - Part 1: Vignole railway rails 46 kg/m and above
- TCDD Order no. 106

5.15.4. Materials

Rails which are compatible with EN 13674-1 and weldings which were performed in accordance with EN 14587-2.

5.15.5. Personnel

Personnel who will conduct the ultrasonic inspection shall be qualified according to EN ISO 9712 and certified in level II at minimum. Mentioned personnel shall start inspections after their competency is approved.

5.15.6. Device

Pulse-echo type devices which meet the requirements specified in EN 12668-3 standard shall be used for conducting the verification of UT inspection system. Probes to be used shall be in 2-5 MHz frequency range and of 0º, 70º (uniaxial and/or biaxial crystal) and 45º.

5.15.7. Inspection conditions

UT inspections on the welding and HAZ zones of the lines that are not commissioned shall be carried out under the conditions specified below:

On condition that it will be performed at least 24 hours after the welding operation.

On condition that the rail temperature is below 50 oC.

In case that any physical damage (press, derailment, etc.) occurs in the welding zones afterwards.

5.15.8. Calibration

Checking of the distance and sensitivity calibration shall be conducted in every 4 hours; in case of a deviation in the calibration settings more than 2%, device shall be calibrated and all tests between these two calibrations shall be repeated.

Calibration of distance

Calibration of distance shall be performed by using K1 and K2 calibration blocks specified in EN 2400 and EN ISO 7963. Probe indexes shall be detected before starting the inspection and shall be included in the report.

Calibration of sensitivity

Sensitivity calibration of the probes shall be conducted by bringing the echoes, which were obtained from the reference reflector (D=2mm Flat Base Hole) in the calibration block produced from the rail material to be inspected, to the screen height of 80%. At least 3 reference reflectors shall be positioned in a way to represent base of the rail, web of the rail and rail head on the calibration block; and each zone shall be checked with the data from the relevant reflector data.

5.15.9. Inspection

The Contractor shall submit inspection procedures, personnel certificates, device calibration certificate and reference rail calibration certificates for approval before the inspection.

Surface to be inspected shall be clean. (the zone of at least 150 mm starting from both lateral surfaces of the welding shall be cleaned of splashing, metallic inclusions, slags etc.)

In case that the rail temperature exceeds 50 oC, UT inspection shall not be conducted.

Visual Inspection

Before ultrasonic inspection of the weldings, welding shall be inspected visually in accordance with TCDD General Order no. 106; and in case of detecting any defects, it shall be recorded in Visual Inspection Test Form completely.

UT Inspection

Inspection shall be carried out on the rail head, rail web and rail base from the both sides of the welding.

Ultrasonic inspection shall be realised with the probes and scanning tools specified in the ultrasonic test procedure in EN 14730 Annex C. Ultrasonic inspection shall be conducted on the welding and HAZ zones

(a zone of at least 15 cm from the welding axis to the both sides). Moreover, each corner of the rail foot shall be checked with a probe having suitable angles.

In addition, welding zone shall be checked for lateral defects by using 0-degree 4Mhz TR probe. In order to achieve the maximum reflection from the defects because of their size and shape, different probe angles may be used.

Coupling fluid water and/or water thinned with methyl cellulose (for example wall paper paste) shall be used for inspection.

Grease or glycerin shall be used for calibration blocks.

Flat base hole with 2 mm diameter shall be used as reference reflector.

5.15.10. Evaluation

Entire parameters of the inspection and all data from the inspection results shall be recorded in the inspection report. Scanning directions, probe angles and positions of the findings shall be shown on the figure by indicating the reference point.

- Recording limit: All findings which exceed 60% screen height of reference echo height for electric arc welding shall be recorded. Dimensions and positions of the recorded findings shall be indicated in the report.
- Acceptance limit: All findings that exceed 80% screen height for electric arc welding are the reason for rejection. Dimensions and positions of the recorded findings shall be indicated in the report.

5.15.11.Reporting

Ultrasonic inspection report shall at least cover the following information:

- Inspection date and location
- Inspection zone and surface condition
- Line and welding number, welding kilometer,
- Name, surname, certificate number of the persons who conducted and evaluated the inspection
- Devices and probes being used (Type, serial no, calibration label date) and calibration data shall be included in the report.
- Contact fluid being used
- Inspection results
    - Rejected weldings shall be marked with a non-erasable paint having contrasting color with the base, web and head of the rail (for example, white, yellow).
    - Accepted weldings shall be marked with a non-erasable paint having contrasting color with the base, web and head of the rail (for example, light blue)

- Dimensions and positions of the defect that is detected for recorded or rejected weldings shall be indicated in the report.

- Deviations from the inspection procedure
- Probes, scanning directions, standards being used in the inspection
- Limitations of the inspection
- Rail temperature
- Additional tests (MT, PT etc.) and results

5.16. De-stressing

5.16.1. General

The requirements apply for the de-stressing aspects of the switches and formation of continuous welded rails.

5.16.2. Reference standards

The specifications hereby take the following standards as references. Latest issues of the following standards shall be valid.

- EN 13674: Railway Applications: Track-Rail (Rail Standard)
- EN 14730-1: Railway applications – Track - Aluminothermic welding of rails - Part 1: Approval of welding processes
- EN 14730-2: Railway applications – Track - Aluminothermic welding of rails - Qualifications of aluminothermic welders, approval of contractors and acceptance of welds
- EN ISO 6507-1: Metallic materials - Vickers hardness test - Part 1: Test method
- EN ISO 7500-1: Metallic materials - Verification of static uniaxial testing machines - Part 1: Tension/compression testing machines - Verification and calibration of the force-measuring system
- EN 1714 ISO 6250: Non-destructive Inspection of Weldings – Ultrasonic Inspection of Welded Joints
- UIC 720 R: Laying and Maintaining the Continuous Welded Rails (CWR)
- DB 824.5010: De-stressing Standard of Deutsche Bahn
- TCDD Technical Specifications for Rail Welding

5.16.3. Definitions

Following terms and definitions shall apply in the context of these specifications:

Mobile Butt Welding Machine (MBWM): The machine which joints the rails with butt welding according to EN 14587-2.

CWR: Continuous welded rail.

Closure rail: The rail which should be located for repairing CWR. It shall be of the correct type and depth which will fit the existing rail and shall be longer than the minimum distance defined for usage.

Preparation of rails: Preparation of the rail end in accordance with joint welding principles.

Initial temperature: Initial measurement of rail temperature for checking the de-stressing temperature and calculating the neutral temperature.

Marking / reference point: The mark which ensures the movement of rail and sleeper compared to each other and the detection of elongation amount.

Bottom and side rollers: Bottom rollers are located between rail and sleeper for preventing the rail lapping on the sleeper. Side rollers are used for ensuring the inclination of rail during the de-stressing in the curves.

De-stressing temperature: Temperature in the range of ±3 ºC of neutral temperature value.

Working temperature limits: Rail temperature within the limits that do not damage ballast and sleepers on the lines formed by CWRs.

Tensioning: The process where the rail is brought to the length it is to achieve in neutral temperature. This process is performed by means of heating machines.

Critical rail temperature: The maximum allowed temperature for rail before taking any protective measures for traffic in continuous welded rails.

Neutral temperature (NT): Rail temperature where the rail length is the same with neutral (de-stressed) rail length. It shall be calculated as T(mean) + 5 ºC.

Mean temperature: It is calculated by taking the average of minimum and maximum rail temperatures in the area where the de-stressing will be performed. Tmean= (Tmin+Tmax)/2

Compression temperature: This temperature shall be in the range of neutral temperature.

5.16.4. Follow-up of the de-stressing

During the de-stressing operation, welding engineer, site forman, welding machine operator, excavator operator, sufficient number of workmen as well as power wrench, heating machine (wagonette), rail cutting and grinding machines shall be present in the site controlled by de-stressing expert who is a Railway Welding Engineer.

The Contractor shall make available the de-stressing expert who is a certified Railway Welding Engineer to follow the de-stressing operation on the rail for each Mobile Butt Welding Machine. This de-stressing expert shall hold a valid certificate on welding and de-stressing approved by European Railway Authorities (Deutsche Bahn – DB etc.).

De-stressing expert shall be responsible for preparing de-stressing reports required to be completed at the site (to be prepared according to Annex-1 and Annex-2), which will enable the follow-up of the de-stressing retroactively.

5.16.5. Equipment required for de-stressing

Minimum equipment and tools for 1 butt welding machine to be used for de- stressing shall be made present and in operating state:

1 heating car, 5 cutting motors, 8 power wrenches having hydraulic torque control and calibrated, 4 rail grinding motors, 1 railway excavator, 3 spiral motors, 1 compressor, 2 torquemeter, side and bottom rollers, 3 thermometers, calculator, tape measure, pencil for marking the reference points, rail pulling device which will not damage the rail and is suitable for rail profile, notched gauge.

5.16.6. Preconditions for de-stressing

De-stressing and rail pulling operations shall be performed with bottom rollers. De- stressing and rail pulling operations without rollers shall not be allowed.

Ballast profile

Line should be completely ballasted and ballast shall be in the correct profile. In case of excessive ballast, these ballasts shall be cleaned to uncover the connection materials before de-stressing operation. In case of less ballast, required arrangements shall be made for having sufficient ballast on the line.

Ballast profile shall be in compatible with the project cross-section.

Curve radius

Curve radius shall meet the following values in the Table-1.

SuperstructureLine Type		**Curve Radius**			
		Expanding the Ballast Bed to the Outer Part of Curve by 50 cm	**Number of Lateral Resistance Plates to be used**		
SleeperLength	Rail Type		1 Lateral Resistance Plate for 3 Sleepers	1 Lateral Resistance Plate for 2 Sleepers	1 Lateral Resistance Plate for 1 Sleepers
ConcreteSleeper l< 2,60m	49 E1	300 > r ≥ 280	280> r ≥190	190 >r ≥180	180>r ≥170
	54 E1	340 > r ≥ 320	320> r ≥230	230> r ≥190	190 > r ≥180
	60 E1-E2	370 > r ≥ 350	350>r ≥260	260>r ≥210	210>r ≥180
ConcreteSleeper l≥ 2,60m	49 E1	260>r ≥ 240	240>r ≥190	190>r ≥180	180>r ≥170
	60 E1-E2	290 > r ≥ 270	270>r ≥190	190>r ≥180	180>r ≥170

Free weldings shall be performed when the line is brought to −20 mm position;

Stress weldings shall be carried out when the line is brought to its final elevation.

De-stressing shall be conducted for the rails of 144 mm which are formed by welding the rails of 36 m with each other by using butt welding.

In case that de-stressing is required in small-radius curves, lateral resistance plates which are in compatible with the sleeper type being used and of the type accepted by the Engineer shall be located in the cases and intervals specified in Table- 1.

5.16.7. De-stressing and technical characteristics

De-stressing operation

De-stressing shall be performed in the following order:

1. Bringing the line to its final status according to its project and cleaning the connection components with big compressors
2. Measuring the initial rail temperature with at least 2 calibrated thermometers and checking it according to the minimum rail temperature limit
3. Unscrewing the connection components
4. Making the rails disconnected
5. Defining the compressing temperature
6. Calculating the elongation amount
7. Setting the check points
8. Locating the bottom and side rollers
9. Extending the length of the rail
10. Screwing the connection components
11. Unscrewing the connection components, sealing the sleeper screw holes with fireproof tap, keeping the unscrewed sleeper screws away from any dirt in the area where the welding is performed,
12. Performing the stressing welding (final welding)

Measuring the initial rail temperature and checking it according to minimum limit

Free welding shall not be performed when the rail temperature is below −3 ºC, stressing welding shall not be performed when it is below 5 ºC, free thermic welding shall not be conducted when it is below 5 ºC and stressing thermic welding shall not be carried out when it is below 10 ºC.

Rail temperature shall be measured in the rail web remained in the shade and by waiting for a certain time (minimum 10 minutes) during which the rail temperature affects the thermometer. 2 digital thermometers which cling on the rail or at least 2 magnetic or mercury thermometers are required during the measurement.

On the rails whose head is hardened, de-stressing process shall be performed in minimum +10 ºC and above rail temperatures.

Making the rails disconnected

Making the rails disconnected is a process where connection components and fishplate connections are unscrewed. In order to support the elongation of the rails, rails shall be forged with plastic hammer or rail forging tools. Steel hammers shall not be used for this operation.

Defining the compressing temperature

Compressing temperature shall be selected from the ones defined in neutral temperature range.

Calculating the elongation amount

Elongation amount (ΔL) is the function of rail length which is de-stressed and the difference (Δt) between the initial rail temperature and selected neutral temperature.

Setting the check points

Elongation amount shall be marked on the rail with two lines to be drawn in 0,5 mm thickness in non-deletable way on the basis of edge of rail settlement area on the sleeper. First line shall be drawn in the level of edge of the rail settlement area, second one shall be drawn in the contrary part of the rail elongation direction and with a distance to the first line equivalent to the elongation amount. When the second line reaches to the edge of the rail settlement area of the sleeper, it shall be understood that the desired elongation amount is ensured. Before drawing the lines, surface shall be painted with a permanent white paint to highlight it. Lines shall be drawn on this white paint. After de-stressing, aluminium plate with 1 cm x 8 cm dimensions shall be adhered. Adhered plate shall be in the form of metering ruler. It shall Show the numbers between −40, 0, +40 mm in milimetrically. Exact point which is de-stressed shall be regarded as the zero point. De-stressing length, de-stressing direction and total elongation amount shall be written adjacent to the welding area with a permanent pen.

Number of reference points to be formed according to the elongation length calculated for de-stressing shall be 3 for each 144 m of rail. Distance between the reference points shall be maximum 60 m.

Locating the bottom and side rollers

Bottom rollers shall be located by putting them on the solid ground to ensure that the rails shall not be obstructed by any substances after the connection components are loosened and in a way that they shall not exceed a distance of 15 sleepers. Rail pads in the places where rollers are located shall be removed.

Side rollers or support rods shall be located on the curves and at intervals given in the following table:

Side roller intervals (Maximum)	
Radius (m)	Inverval
1000-801	8 sleepers
800-601	6 sleepers
600-400	4 sleepers
Below 400	2 sleepers

Side rollers shall be located to have one roller on one sleeper in an irregular way. On the straight line (alignment), side rollers may be used as one roller in one length on the desired side of the rail to ensure straightness and facilitate compression.

Extending the length of the rails

Rails shall be brought to the length which is required by the neutral temperature. This extending process shall be performed by heating cars which are motor-driven and heat the two rails at the same time.

In case that the rails are required to be heated (if the rail temperature is below minimum neutral temperature value); elongation amount shall be calculated by taking R≥1000 m and neutral temperature in the straight lines as a basis. Elongation amount shall be calculated by taking the stress temperature top limit as a basis in the R<1000 m curves, switches and sections 150 m beyond the switches.

Screwing the connection components

Rails shall be screwed in the fastest way starting from the time they are laid on each sleeper, even if these rails are on the new lines without any traffic. Screwing the connection components shall be carried out just after the elongation is achieved in order to prevent rails shrinking. In case that the initial rail temperature is in the range of neutral temperature, connection components shall be screwed after unscrewing the rails by using bottom rollers without any need for elongation of the rails. Stressing shall be repeated in 60 meters in back direction and any shrinkage shall be checked by watching the previous reference points.

It shall be checked whether the connection components are screwed in the correct and specified torque values.

Values shall be compatible with Table – 3.

Connection Type	**Typ**	**Section to be checked**	**Allowed torque value**	**Check**
W21	Skl21	Distance between spike and angle guide settlement surface ≤0,5mm	250 Nm	to be checked with feeler gauge
Switch Connections	Skl21	Distance between spike and angle guide settlement surface ≤0,5mm	250 Nm	
	Skl12	Distance between the middle ofspike and upper surface of rail foot 1-2 mm	180-200 Nm	
Concrete Track	Skl15	Distance between spike and angle guide settlement surface ≤0,5mm	200 Nm	

Before screwing the connection components, it shall be ensured that the sleeper screw holes, rail settlement area and connection components are clean. Rail pads and angle guide shall be in their places. Heating car shall produce flaming when the heating rod is up; rod shall be pulled down and heating shall be started while the car is moving. Damaged materials shall be replaced.

Performing the stressing welding (Final welding)

Stressing welding is a welding type where de-stressed and screwed the rail is welded with another rail. Stressing welding shall be performed just after the rail is screwed.

For the butt welding and thermic welding, requirements in TCDD Technical Specifications for Rail Welding shall be met.

5.16.8. Performing joint welding and de-stressing in the switches

Switch installation temperatures shall be selected as such: R < 1200 m, can be installed at a desired temperature.

R = 1200 m, can be installed between +5 ºC and +35 ºC. R > 1200 m, can be installed between +10 ºC and +30 ºC.

After the switch is laid and ballast cross-section is brought to the final position as elevation and location, then the welding and de-stressing process is started.Intermediate welding and final welding for switches shall be carried out according to the welding and de-stressing procedure to be delivered by the switch manufacturer.

Intermediate weldings shall be carried out after all required switch adjustments are made. Following the installation of Switch Driving, Interlocking, Inspection (SDII) systems, stressing welding shall be performed on the switch. After the completion of intermediate weldings and stressing weldings, blades shall be adjusted and welded. Before performing the welding, positions of stock rail and blades shall be checked with setsquare. Positions of mid-point anchor wedges shall be measured according to the temperature.

5.16.9. Stress measurement of the line

Following the completion of de-stressing, non-destructive stress measurement shall be conducted on the sections and lengths in a way to represent the whole line and it shall be reported by the experts. De-stressing operation shall be repeated in the areas where it is not found appropriate. Stress measurements of the line shall be made in non-destructive way, rail connection components shall not be unscrewed, rail shall not be removed or any cutting operation shall not be carried out on the rail. Detailed training on the non-destructive stress measurement of the line and its evaluation shall be given to the personnel of the Employer/DGII.

5.17. Culverts

5.17.1. Scope of works

The engineering structures an effective span length less than 8,00 meters are called as "culverts".

5.17.2. Applicable standards

Design of the engineering structures (viaduct, bridge and culvert) to be built on rail routes shall be done according to applicable Turkish and EU specifications and standards:

- The design loads are defined according to the rules and methods for the railway bridges given in Chapter 6 (Project Speed: 250 km/h) in TSE EN 1991-2 (EUROCODE-1 Part:2: Traffic Loads on Bridges) Standard.
- For the design train (vertical live load) load, the load in UIC -71 (Load Model 71) (Load Model SW/0 for continuous bridges) and vertical load factor "α=1,40" value shall be used.
- Static and/or dynamic analysis in line with these design loads are made according to the rules and methods given in TSE EN 1991-2 (EUROCODE-1 Part:2: Traffic Loads on Bridges).
- In the design of reinforced concrete bridges, the rules and methods given in TS EN 1992 (EUROCODE –2 Design of Concrete Structures) Standard and UIC 772-2 Leaflet and the Earthquake Regulation of DLH.
- For the earthquake effects of the engineering structures (viaduct, bridge, culvert, etc.), the criteria given In TS EN 1998 (EUROCODE –8 Design of Structures for Earthquake Part 1: General Rules of Structures for Earthquake Resistance and Part 2: Bridges) Standard and AASHTO Standard shall be followed.
- For the interaction between the railway track and bridge carrier system, the criteria and rules given in UIC 774-3 Leaflet (Track/Bridges Interaction Recommendation for Calculations) shall be followed.

Calculations of the track-bridge interaction are required to be made in line with the criteria for the engineering structures of rapid railways in "EN 1991-2, 1990-A1 Annex A-2, UIC 774-3r".

The works will be carried out to determine all kinds of details and dimensions of the footpaths and guardrail, expansion joints, support components and similar works, and to prepare the plans, sections and reinforcement section plans of all bridge elements at the appropriate scales specified in the standards.

If the methods and formulas used in the calculations are different from those which are generally applied, it shall be clearly stated from which source they are taken.

In the event of using computer programs for the solutions of carrier system, explanatory information about the modelling, inputs and outputs of the system shall be provided.

The final calculation report file shall include reports, documents, sketches and plans:

- General site plan,
- Topographical plan of the bridge or culvert,
- Cross-sectional and longitudinal sections,
- Geological and geotechnical survey report made in the vicinity of the bridges and culverts within the framework of the issues given in the Technical Specification of the Ground Investigation work,
- Report showing drilling locations and results,

- Hydraulic and hydrological survey report (containing information about the place of the bridge or the culvert to be built on the route),
- Static and strength calculations of the carrier systems of the bridge or culverts (discharge, abutment and pier, foundation, etc.) and the calculation reports related to the earthquake analysis (by specifying the reinforcement selected as the result of the calculation and the item number used in the project in the relevant section and by listing them as a summary),
- Calculations for excavation shoring and ground anchors for the bridge and/or culvert constructions,
- Diskettes or CDs containing the data file and calculations result outputs of the computer software used in the calculation analysis for the related engineering structure (the computer software list to be used shall be submitted to the Engineer and the opinion of the Engineer about the computer software that are available in the list shall be asked).
- Quantities and survey lists specifying all kinds of work items and quantities required to construct and operationalize the bridge or culvert,
- The project file to be prepared for each bridge and culvert shall include, but not limited to, all sections, details and plans for application with the scales to be determined by taking the opinion of the Engineer:
- Plan showing the drilling locations of the bridge and/or culvert to be constructed on the site,
- Plans showing the basic dimensions and depths and settlements,
- Cross-sections and longitudinal sections indicating the size, location and elevations of the entire carrier system of the bridge and/or culvert,
- Detailed plans of the formwork and reinforcement of the entire carrier system (discharge, abutment and piers, foundations, etc.),
- Detailed plans of the formwork and reinforcement including data such as pre-stressing force of pre-stressing beams, properties materials used, and type, size and properties of the material of elastomer supports,
- The plan of the carrier system of steel bridge and/or culverts and all the node and element joint drawings for the application (Element and node joints shall be manufactured as riveted. Otherwise, approval of the Engineer shall be got for the other joints to be used.) and the plans including the list of material,
- Map sheets with all detailed drawings for the application of the shoring and anchorages to be made during the manufacture of the foundation and piers of the bridge and/or culvert,
- Schemes showing the concrete casting stages,
- Plans showing the manufacturing phases of the bridge and/or culvert,
- Designs and details regarding the adjustment and regulation of the drain, when necessary,
- Other required detail designs (guardrail, bridge drainage, dilatation, supports, ... etc),

The Engineer shall notify the Contractor of the corrections and changes necessary upon the completion of the examinations of the submitted designs and calculations.

6. PAVEMENT WORKS

6.1. Unbound gravel

6.1.1. Applicable standards

- EN 13285: Unbound mixes - Specifications
- EN 13242: Aggregates for unbound and hydraulic bound mixes for use in civil Engineering work and road construction
- EN 933-1: Determination of particle size distribution – Sieving method
- EN 933-3: Determination of particle shape. Flakiness index
- EN 933-5: Determination of percentage of crushed and broken surfaces in coarse aggregate particles
- EN 933-8: Assessment of fines. Sand equivalent test
- EN 933-9: Assessment of fines. Methylene blue test
- EN 1097-2: Tests for mechanical and physical properties of aggregates. Methods for the determination of resistance to fragmentation
- EN 1367-1: Tests for thermal and weathering properties of aggregates. Determination of resistance to freezing and thawing
- EN 13286-1, 2, 3, 4, 5: Unbound and hydraulic bound mixtures: Tests methods for laboratory dry density and water content"
- EN 1744-1: Tests for chemical properties of aggregates. Chemical analysis
- EN 17892-12: Atterberg limits

6.1.2. General

This section covers the supply of constituent materials, design of mixes, grading, transport, placing, compaction and finishing of unbound mixes required in the works.

Definition of the unbound mix

Specifications required to guarantee the quality of the unbound mix are those indicated in EN 12385, supplemented by the following clauses, according to the use and the place of the material in the pavement.

Mix	Pavement Layer	Mixture designation	Maximum fines content passing 0.063mm sieve	Minimum fines content passing 0.063 mm sieve
1	Sub-Base layer	0/63	UF12	LF2
2	Base Layer and back-fill	0/31,5	UF9	LF4

Definition of the Unbound Mixes

(**) UF: Upper fines content, LF: lower fines content, OC Oversize

Mix	Oversize passing D sieve	Overall grading category
1	OC80	GB
2	OC85	GB
3	OC85	GB

Additional requirements of the Unbound Mixes

(**) UF: Upper fines content, LF: lower fines content, OC Oversize

Before the start of any work on the site, the Contractor shall provide for an approval sample of all the constituent materials to be used in the unbound gravel and shall furnish evidence that they comply with the the Technical Specifications.

Aggregates

The Contractor shall provide results of tests by an approved laboratory relating to the relevant properties of the aggregates to be used in the works. The testing shall be repeated in accordance with EN 13242 or when the source of material is changed.

Aggregates are natural aggregate conform to EN 13242.

Recycled aggregates are allowed in a proportion of less than 20% by weight in any batch of unbound mix.

The Contractor shall inform the Engineer of any modification occurred in the aggregate production.

a) General Properties

For each unbound mix, the nominal size of the largest aggregate (Dmax) is proposed and justified by the Contractor in proposed mix design. In all cases Dmax is limited to 31,5 mm for use in regulating layer and 63 mm for use in capping layer.

Grain size distribution limit values for 0/31,5 layers without binder

Screen opening (square shaped) (mm)	Percent Passing (%)
0.063	4-9
0.5	5-35
1	9-40
2	16–47
4	22–60
8	35–68
16	55–85
31.5	85-99
45	100

Grain size distribution limit values for Capping layer 0/63 without binder

Screen opening (square shaped) (mm) Percent Passing (%)	Percent Passing (%)
0.063	2-12
1	5-35
2	9-40
4	16-47
8	22-60
16	35-68
31.5	55-85
50	75-90
63	85-99
80	100

b) Mechanical and Chemical Properties

Property	0/63	0/31,5
Mechanical resistance LA according to EN 1097-2	< 40	< 35
Flakiness index according to EN 933-3	< 20	< 20
Sand equivalent on 0/2 fraction according to EN 933-8	ES > 40	ES > 50
Activity of fines Methylene blue according to EN 933-9	< 2.5	< 2.5
Coarse aggregate: Frost sensitivity and water absorption according to EN 1097-6	For each granular class WA24 ≤ 1 %	For each granular class WA24 ≤ 1 %
Maximum soluble sulphate content according to EN 1744-1:	AS ≤ 0.8	AS ≤ 0.8
Maximum total sulphur content according to EN 1744-1	S ≤ 1	S ≤ 1
Crushing index according to EN 933-5	Ic □□50 %	□c □□50 %
Part of uncrushed aggregates according to EN 933-5	Uc ≤ 30 %	Uc ≤ 30 %

Granular material shall not contain more than 2 % of organic matter and lightweight particles, e.g. wood pieces, roots, coal, etc.

Mix design

The unbound mix shall respect the mechanical performances (dry density and maximum laboratory water content according to standards EN 13286-1 and 13286-2 with modified Proctor energy.

Production

Granular stone material to be used in capping layer and regulating layer shall be produced by crushing rock mass obtained by blasting, or by crushing larger size gravel and boulders in a crushing plant.

Natural gravel or natural detritus for unbound mix execution shall be obtained by sifting out the upper fractions that can be crushed to respective grain size.

If the produced or natural stone material lacks particles of specific size, the grain size distribution can be corrected by adding granular stone of specific fractions. The stone material mixture shall be well homogenized.

Storage and handling materials

The Contractor shall make the required arrangements to maintain the quality of the material during storage and handling, avoiding segregation and contamination.

Material that has deteriorated or that has been contaminated or otherwise damaged shall not be used in the unbound mix. Such materials shall be removed from the site without delay.

Transport

The Contractor shall install on his production site, for the whole duration of the works a scale allowing the weighting of each truck in one operation and the issue of weighting receipt with the day and hour of truck charging as well as identification of the production plant.

Transport of unbound material 0/31,5 for sub-base and base layers shall be done in clean trucks, covered between their departure point and delivery on site to avoid contamination.

Transport of material should be in accordance with the general quality requirements of the contract.

The transport routes on site and off site between the production area and the laying location will be submitted to the Engineer for approval.

Laying and compacting

The supporting layer shall be humidified if required, according to meteorological conditions before placing of the unbound mix. The placing of capping and sub-base shall be done in full width of carriageway or platform, in such a way that a total thickness 2-3 cm in excess of final required thickness is obtained before final finishing.

In places where the width increases above a typical road cross-section (parking zone, entry/exit slips), laying should be done in full width of main carriageway, joint being accepted on the adjacent parts.

The placing of backfill shall be done in one pass to fill the excavation and trenches, wherever possible. Where the width exceeds the possible back-fill in one operation, the Contractor shall ensure that no joints are placed under finally circulated or sensible areas.

To ensure proper compaction, the thickness of placing for each individual layer should not exceed 300 mm, and not be below two times maximum gravel size, meaning 150 mm for sub-base and base layers.

Compaction is carried out by vibrating machines: plate vibrator, compactors, vibratory rollers, or

pneumatic-tired rollers, combined roller with pneumatic or metal tires, individually or in combination.

On capping and gravel sub-base and base, after laying of the material, compaction shall be done carefully over the complete layer surface. Rollers and / or compacting machinery shall move at a constant speed from 2.5 km/h to 4 km/h.

The places not reachable by heavy compacting machinery shall be compacted in thinner layers by other means in accordance with the requirements.

All requirements for the placed course shall be fulfilled before placing the next course. Compacting process shall be repeated if the finished layers are damaged due to freezing, rains, site traffic, or other activities on the existing layers during the period from its placement to the placement of the following layer.

Weather conditions

Laying is authorised on humid surfaces. It is forbidden on a surface with or covered with snow or presenting standing water.

Laying is subject to prior authorisation by the Engineer in the following cases:

- if the temperature at 7 am is lower than 0°C,
- if wind speed exceeds 60 km/h.

Laying of unbound mixes is postponed during storm, heavy rain or limited but continuous rain.

In case of violent storms during laying, the Engineer can order the removal of the unbound mix that have incurred damages.

Finishing

The finishing of the sub-base and base layer shall be performed with automatic equipment type grader, guided by fixed references (laser or fixed wires) at inter distances of maximum 5 m.

The finishing of the backfill shall be performed mechanically or manually according to the configuration on site and instructions of the Engineer.

Immediately after compaction and final regulating of the layer of unbound mix, and in all cases, during the same day, the capping, sub-base and base layers shall be covered with prime coat. Composition and specifications of Prime coat are given in chapter E.4 of the present specifications.

According to weather conditions, in case of obvious drying during laying, a moderate but continuous spraying shall be put in place. If, before spraying of the prime coat, the surface is not humid, it shall be humidified.

Final layer properties

The final properties of the layers shall be the following:

Property	Capping 0/63	Base 0/31,5	Backfill 0/31.5
Bearing capacity Loading plate modulus E [MPa] (DIN 18 134)	> 45 MPa	> 60 MPa	
Thickness	e (theoretical thickness) 3 cm	e (theoretical thickness) 2 cm	e (theoretical thickness) 3 cm
Levelling	z (theoretical level) – 3 cm / + 1 cm	z (theoretical level) 2 cm	z (theoretical level) 3 cm

Local deformations - transverse - longitudinal		3 cm 2 cm	
Width - width from the theoretical edges of the layer Total width of the layer	W (theoretical width) 10 cm W -5 < measured width < W+10	W (theoretical width) 5 cm W < measured width < W+10	W (theoretical width) 5 cm W < measured width < W+10

Final Layer properties

Acceptance tests

Acceptance tests are full-size tests performed on unbound gravel samples for sub-base and base layer produced with the equipment of the site, and not in laboratory (as tests perform during mix design), before the start of any laying work on site.

All unbound gravel shall be subject to acceptance tests.

Acceptance tests shall be renewed in case of change of product supplier or significant modification in the properties of one product.

Quality control

The quality control of the constituent materials, the mix and the final layer achieved is part of the scope of services of the Contractor and shall be carried out following the present specifications.

Provision of records:

The Contractor shall maintain written records that provide the following:

- Date on which each section was laid, volume of material used and its origin (in particular if several material origins are used in parallel) and the position of the section in the works.
- Daily maximum and minimum temperatures.
- Nature of samples and dates on which they were taken, including identification marks.
- Results of tests on samples taken.

Quality Hold Points

The quality plan shall include details of approval procedures, hold points and witness points, including advance notice duration. The minimum list of hold points is given in the table hereafter.

6.2. Bituminous mixes

6.2.1. Applicable standards

- EN 58: Bitumen and bituminous binders – Sampling of bituminous binders
- EN 434-2:1984 Cationic bitumen emulsions for roads - Quality requirements.
- EN 447: Grouting mass for joins on pavements.
- EN 812-1: Natural and crushed stone aggregate - Determining percentage of clay balls.
- EN 812-103: Aggregate grading analysis – particle size distribution.
- EN 932-1: Tests for general properties of aggregates - Part 1: Methods for sampling
- EN 932-2: Tests for general properties of aggregates - Part 2: Methods for reducing laboratory samples
- EN 933-1: Tests for geometrical properties of aggregates - Part 1: Determination of particle size distribution-Sieving method
- EN 933-4: Tests for geometrical properties of aggregates - Part 4: Determination of particle shape-Shape index
- EN 933-5: Tests for geometrical properties of aggregates - Part 5: Determination of percentage of crushed and broken surface in coarse aggregate particles
- EN 933-6: Tests for geometrical properties of aggregates - Part 6: Assessment of surface characteristics. Flow coefficient of aggregates
- EN 933-8: Tests for geometrical properties of aggregates - Part 8: Assessment of fines Sand equivalent test
- EN 933-10: Tests for geometrical properties of aggregates - Part 10: Assessment of fines – Grading of fillers (air jet sieving)
- EN 1097-1: Tests for mechanical and physical properties of aggregates - Part 1: Determination of the resistance to wear (micro-Deval)
- EN 1097-2: Tests for mechanical and physical properties of aggregates - Part 2: Methods for the determination of resistance to fragmentation
- EN 1097-4: Tests for mechanical and physical properties of aggregates - Part 4: Determination of voids of dry compacted filler
- EN 1097-6: Tests for mechanical and physical properties of aggregates - Part 6: Determination of particle density and water absorption
- EN 1097-7: Tests for mechanical and physical properties of aggregates - Part 7: Determination of particle density of filler; cylinder method

- EN 1097-8: Tests for mechanical and physical properties of aggregates - Part 8: Determination of polished stone value
- BS 1377 P4 Methods of Test for Soils for Civil Supervisoring Purposes – Part 4: Compaction - Related Tests
- EN 1426: Bitumen and bituminous binders – Determination of needle penetration
- EN 1427: Bitumen and bituminous binders – Determination of softening point – Ring and Ball method
- EN 1428: Bitumen and bituminous binders – Determination of water content in bitumen emulsions – Isotropic distillation method
- EN 1429: Bitumen and bituminous binders – Determination of residue on sieving of bitumen emulsions, and determination of storage stability by sieving
- EN 1430: Bitumen and bituminous binders – Determination of particle polarity of bitumen emulsions
- EN 1925: Natural stone test methods – Determination of water absorption coefficient by capillary.
- EN 1926: Natural stone test methods – Determination of compressive strength
- EN 1936: Natural stone test methods – Determination of real density and apparent density and of total and open porosity
- EN 12272-2: Surface dressing – Test method – Part 2: Visual assessment of defects
- EN 12591: Bitumen and bituminous binders – Specifications for paving grade bitumen
- EN 12592: Bitumen and bituminous binders – Determination of solubility
- EN 12593: Bitumen and bituminous binders – Determination of the Fraass breaking point
- EN 12594: Bitumen and bituminous binders – Preparation of test samples
- EN 12595: Bitumen and bituminous binders – Determination of kinematic viscosity
- EN 12596: Bitumen and bituminous binders – Determination of dynamic viscosity by vacuum capillary
- EN 12607-1: Bitumen and bituminous binders – Determination of resistance to hardening under the influence of heat and air – Part 1: RTFOT Method
- EN 12607-3: Bitumen and bituminous binders – Determination of resistance to hardening under the influence of heat and air – Part 3: RFT method
- EN 12697-1: Bituminous mixtures – Test methods for hot mix asphalt – Part 1: Soluble
- binder content
- EN 12697-2: Bituminous mixtures – Test methods for hot mix asphalt – Part 2: Particle size distribution

- EN 12697-5: Bituminous mixtures – Test methods for hot mix asphalt – Part 5: Maximum density
- EN 12697-8: Bituminous mixtures – Test methods for hot mix asphalt – Part 8: Determination of the air voids content of bituminous materials
- EN 12697-11: Bituminous mixtures – Test methods for hot mix asphalt – Part 11: Determination of the compatibility between aggregate and bitumen
- EN 12697-12: Bituminous mixtures – Test methods for hot mix asphalt – Part 12: Determination of the water sensitivity of bituminous specimens
- EN 12697-13: Bituminous mixtures – Test methods for hot mix asphalt – Part 13: Temperature measurement
- EN 12697-20: Bituminous mixtures – Test methods for hot mix asphalt – Part 20: Indentation using cube or Marshall specimens
- EN 12697-22: Bituminous mixtures – Test methods for hot mix asphalt – Part 22: Wheel tracking
- EN 12697-27: Bituminous mixtures – Test methods for hot mix asphalt – Part 27: Sampling
- EN 12697-28: Bituminous mixtures – Test methods for hot mix asphalt – Part 28: Preparation of samples for determination of binder content, water content and grading
- EN 12697-30: Bituminous mixtures – Test methods for hot mix asphalt – Part 30: Sample preparation, impact compactor
- EN 12697-34: Bituminous mixtures – Test methods for hot mix asphalt – Part 34: Marshall test
- EN 12697-36: Bituminous mixtures – Test methods for hot mix asphalt – Part 36: Method for determining the thickness of a bituminous pavement
- EN 13108-1: Bituminous mixtures. Material specifications: Asphalt concrete
- EN 13108-10: Bituminous mixtures – Quality – Part 10: Production plant control
- EN 13108-20: Bituminous mixtures. Materials specifications. Type testing
- EN 13108-21: Bituminous mixtures. Material specifications. Factory production control
- EN 13036-1: Road and airfield surface characteristics. Test methods. Measurement of pavement surface macrotexture depth using a volumetric patch technique
- EN 13036-4: Pavement surface characteristics – Test methods – Part 4: Method for measurement of skid resistance of a surface: The pendulum test
- EN 13036-7: Pavement surface characteristics – Test methods – Part 7: Measurement of single irregularities – The straight edge test
- EN 13243: "Aggregates for bituminous bound mixes for use in road construction"

- EN 13399: Bitumen and bituminous binders – Determination of storage stability of modified bitumen

General

This section covers the supply of constituent materials, design of mixes, grading, transport, placing, compaction and finishing of bituminous mixes required in the works.

Definition of the bituminous mixes

Specifications required to guarantee the quality of the bituminous mix are those indicated in the EN 13108-1 for BNS 22 and AB 11 and EN13108-6 for AB4 supplemented by the following clauses, according to the use and the place of the material in the pavement.

MIX	Pavement Layer	Mixture designation
1	Base Course	BNS 0/22sA
2	"Regular" Wearing course	AB 0/11s
3	"Low volume" Wearing course	AB 0/4

Definition of the Bituminous Mixes

Before the start of any work on the site, the Contractor shall provide samples of all the constituent materials to be used in the bituminous mixes and shall furnish evidence that they comply with the requirements.

Aggregates

The Contractor shall provide results of tests by an approved laboratory relating to the relevant properties of the aggregates to be used in the works.

Aggregates are natural aggregate conform to EN 13043.

Recycled aggregates are allowed in a proportion of less than 20% of the total weight of aggregates in any batch of the bituminous mix.

The Contractor shall inform the Engineer of any modification that occurred in the aggregate production.

General properties

The aggregates for each bituminous mix shall be recomposed from at least 3 fractions of stone grit.

For each bituminous mix, the nominal size of the largest aggregate (Dmax) is proposed and justified by the Contractor for proposed mix design. In all cases Dmax is limited to 22 mm for use in base course, and to 11 or 4 for use in wearing course layers.

Fines

Fines for all bituminous mixes shall comply with the following specifications

Property	Value
Water content according to EN1097-1	< 1%

"Rigden" voids of dry compacted filler according to EN1097-1	V 28/38
Rigidification "Delta ring and ball temperature" according to 13179-1	TBA8/16
Methylene Blue test (on fines)	VBf < 10
Passing at sieve 0.2mm	100%
Passing at sieve 0.063mm	>= 70%

Bitumen

The following bitumen, according to bitumen classes EN 12591 for pure bitumen are solely accepted for the mixes:

Bitumen class	Mix 1	Mix 2	Mix 3
Pure Bitumen 50 / 70	x	x	x
Pure Bitumen 70 / 100			x

Simultaneous use of bitumen from different refineries or batches is forbidden.

The eventual change of refinery or binder shall match with clearly different phases of the construction.

The modification shall be submitted prior to its implementation along with full testing documentation for the new constituents.

Mix design

The mix design for each mix is proposed by the contractor according to a valid type testing following EN 13108-20 with the full laboratory mix design. The indicative mix composition is given in tables E.2.6-1, E.2.6-2 and E.2.6-3 but shall be adapted by the contractor, taking into account the fractions and properties of the aggregates supplied to respect the final mix design properties.

The properties of the mixes demonstrating their compliance with the present specifications with all the final constituents to be used for the works shall be proposed by the contractor during the preparatory works period, or at least 4 weeks before the start of the works.

Base requirements of bituminous mixes

The general properties of bituminous mixes are given in the tables below:

Mix	Pavement Layer	Mixture designation	Minimum voids (%)	Maximum voids (%)

1	Bituminous Base Course	BNS 22	V_{min} = 5	V_{max} = 9
2	"Regular" Bituminous Wearing course	AB 11	V_{min} = 4.5	V_{max} = 7.5
3	"Low volume" wearing course	AB 4	N/A	N/A

Base Properties of the bituminous mixes

Specific requirements for AB4

In addition to the specifications of the previous sections, the specific following requirements are given for the AB4 mix, according the type testing defined in EN13108-20:

Property	Value
Resistance to abrasion	Abr_{A50}
Resistance to de-icing fluid	ß85
Indentation	3,0 - 8,0
Maximum increase of indentation in 30 min	*Inc0.6*
Maximum dynamic indentation in %	*Idyn3.5*

Additional requirements for the AB4 Mix

Production and storage area

The production and storage area shall be set up to enable:

- the control of each constituent
- sufficient storage capacity for at least 30 days of production
- circulation between the heaps and to avoid
- mixes between materials
- segregation and pollution of the constituents
- pollution of the surface run-off water.

Production plant

The batching plant used for the production of all bituminous mixes shall be agreed and authorized.

When proposing the production plant to the acceptance, the Contractor shall prove its recent control, calibration and tuning, to demonstrate that the plant is working according to the specified tolerances. All plants shall be equipped with the following parts:

- Containers allowing storage of all constituent materials without segregation, with fines to be stored in silos, and binder in sufficient capacity for at least 2 hours of working at usual capacity.
- Measuring caps to obtain the flow of material respecting the proportions of each constituent, continuously.

- Transfer and weighting equipment, avoiding any mix of the different aggregate fractions and any introduction of outside materials. The Contractor should place the appropriate device in the feeder of sand and filler to eliminate, if any, any hard agglomerated clods. For the binder introduction, a variable pump allows adjusting the flow of binder to the flow of aggregates. The temperature of the binder shall be measured just before the coating.
- Tube or drum allowing drying, heating, coating and distribution, at constant temperature (± 5°C)
- Storing silo
- Anti-dusting filters
- Control room and equipment
- Automated data acquisition systems to allow the permanent production control of the mix.
- Energy supply

The data acquisition system shall collect at least the following data, proving the correct functioning of the plant:

- Setting of the aggregate supplies
- Rate of production and output, working hours and stops,
- Temperature of bitumen and mix
- Quantity of mix produced
- Proportion of constituents (binder and aggregate fractions) The capacity of the plants shall not be lower than 250 t/h.

The production temperature shall not exceed the following batching temperatures:

Bitumen class	Temperature Range
50 / 70	150 – 190 °C
70 / 100	140 – 180 °C

Batching temperatures for the bituminous mixes

Storage and handling materials

The Contractor shall make the required arrangements to maintain the quality of the all constituent material and final produced mixes during storage and handling, avoiding segregation and contamination.

Constituent material that has deteriorated or that has been contaminated or otherwise damaged shall not be used in the bituminous mixes. Such materials shall be removed from the site without delay.

The mixing plant shall be equipped with a heated temporary storage tank of a capacity of 10t. The height of dropping from the storage tank into the trucks should be less than 3 m.

The Contractor shall use, for the whole duration of the works a scale allowing the weighting of each truck in one operation and the issue of weighting receipt with the day and hour of truck charging as well as identification of the production plant and the mix.

Before the mix leaves the production plant, each truck shall pass on the scale, be weighted and get a ticket delivered accordingly.

Transport

Transport of bituminous mixes shall be done in clean dumper trucks, covered between their departure point and delivery on site to avoid cooling of the mixes.

Transport of material should be in accordance with the general quality requirements of the contract. The transport routes on site and off site between the production area and the laying location will be submitted to prior acceptance to the Engineer.

On the capping layer and more over the intermediate pavement layers, the heavy vehicles shall respect the law on road safety and in particular the axle load limitations prescribed on public roads.

The Contractor shall maintain any off-site transport routes and get prior approval for their use and improvement from the Engineer in charge of their operation and maintenance.

Laying and compacting

The laying area shall be in constant communication with the production plant.

The supporting layer shall present sufficient performances to allow proper circulation, compaction and levelling. The supporting layer shall be accepted by the Engineer before placing the next course.

It shall be cleaned and impregnated by tack coat before placing of the bituminous mix, according to section E.4 of the present specifications.

Before laying of the material, its origin shall be identified by the Contractor and the weighting ticket collected for control. The material to be placed shall be always above 125°C. In case of wind or rain, the temperature shall not be below 130°C. The temperature is measured after the compaction table of the finisher. Material where insufficient temperature has been measured shall be removed and displaced by the Contractor to a waste disposal site approved by the Engineer.

Laying shall be done using a finisher with high compaction power.

On the side joints, near side-walks or gutters, the voids subsisting after passage of the finisher shall be filled manually in such a way that no difference in level subsists after compaction.

Guidance of the finisher is done according to the position of the layer to be placed:

Layer position	**Guidance method**
Wearing course	Guidance with fixed screw (fixed level)
Binder course	Beams placed after the finisher or Guidance on wires, placed with posts at maximum 5m distances, or laser guidance
Base course	Guidance on wires, placed with posts at maximum 5m distances, or laser guidance

Compaction is carried out by vibratory or static smooth rollers, and pneumatic-tired rollers, combined roller with pneumatic or metal tires, individually or in combination to ensure proper finished properties.

Only in places with difficult access, vibrating plates or small dimension rollers can be used.

After laying of the material, compaction shall be done carefully over the complete layer surface. Rollers and / or compacting machinery shall move at a constant speed and a defined number of passages, according to the values obtained in the trial section.

All requirements for the placed course shall be fulfilled before placing the next course. Compacting process shall be repeated if the finished layers are damaged due to freezing, rains, site traffic, or other activities on the existing layers during the period from its placement to the placement of the following pavement structure course.

Finishing and joint

In case cold joints are required during the laying, they shall follow the execution procedure described hereafter.

Transverse construction joints on subsequent layers shall be offset by at least 1m from the layers beneath.

The transverse joints shall be executed by a saw cut, bias to the axis of the road; the material removed after the sawing shall be evacuated to a waste disposal site approved by the Engineer. Preparation of the joint immediately before laying of the adjacent material include its cleaning (blasting) and coverage with bitumen emulsion or pre-heating or use of thermo-fuse strips.

Connection to existing roads will be done through bias saw cuts compared to the longitudinal axis of the construction carriageway. The saw cut shall be designed not to create a sudden change in vertical profile of the carriageway. On the wearing course, the connection with existing surface shall be made through engraving (or successive reduction of thickness) on top of tack coat. The length of the overlapping shall be set to allow proper levelling and roughness on the finished surface.

Final layers properties

The final properties of the layers shall be the following:

Property	Base course	Binder Course	Wearing course
Thickness	(Theoretical thickness) ± 3 cm	(Theoretical thickness) ± 2	(Theoretical thickness) ± 2
Levelling	z (theoretical level) – 3 cm / + 1 cm	(Theoretical level) ± 2 cm	(Theoretical level) ± 2 cm
Local deformations / Surfacing - transverse - longitudinal	 3 cm 2 cm	 1.5 cm 1 cm	 1.0 cm 0.8 cm

Width Width from the theoretical edges of the layer Total width of the layer	W (theoretical width) ± 3 cm W < measured width < W+5	W (theoretical width) ± 3 cm W < measured width < W+5	W (theoretical width) ± 3 cm W < measured width < W+5

Final layer properties (all layers)

Property	Wearing courses
Roughness (not standardised, IRI, measured using BI or Profiler)	< 2.5
Macrotexture (PMT according to EN 13036-1)	> 0.6

Final layer properties –wearing course

Acceptance tests

Acceptance tests are full-size tests performed on bituminous mix samples for each layer produced with the equipment of the site, and not in laboratory (as tests performed during mix design), before the start of any laying work on site.

All bituminous mixes shall be subject to acceptance tests.

Acceptance tests shall be renewed in case of change of product supplier or significant modification in the properties of one product.

Quality control

The quality control of the constituent materials, the mix and the final layer achieved is part of the scope of services of the Contractor and shall be carried out following the present specifications.

Provision of Records:

The Contractor shall maintain written records that provide the following:

(i) Date on which each section was laid, volume of material used and its origin (in particular if several material origins are used in parallel) and the position of the section in the works.

(ii) Daily maximum and minimum temperatures.

(iii) Nature of samples and dates on which they were taken, including identification marks.

(iv) Results of tests on samples taken.

Quality Hold Points

The following supplements the requirements of General Specification Clause 103.

The quality plan shall include details of approval procedures, hold points and witness points, including advance notice duration. The minimum list of hold points is given in the table bellow.

Work Phase	Hold Points
Setting Out	Staking out approval.
Production of bituminous material	Conformity of aggregates (material, supplier, characteristics) Conformity of binder (supplier and product characteristics) Acceptance of plant area, handling and storage arrangements Conformity of mix design
Bituminous Layers	Conformity of the quality of the bottom of the layer: levelling, thickness and quality of the underlying layer. Conformity of the layer materials. Acceptance of plant and equipment arrangements Acceptance of Transport arrangements

Hold Points of bituminous mixes

6.3. Cement treated gravel base course

6.3.1. Applicable standards

- EN 13242: Aggregates for unbound and hydraulic bound mixes for use in civil Engineering work and road construction
- EN 14227-1: Hydraulically bound mixtures – specifications; Part-1: Cement bound mixtures
- EN 196-1: Methods of testing cement - Part 1: Determination of strength
- EN 196-2: Methods of testing cement - Part 2: Chemical analysis of cement
- EN 196-3: "Methods of testing cement - Part 3: Determination of setting time and soundness
- EN 196-6: Methods of testing cement - determination of fineness
- EN 196-7: Methods of testing cement - Part 7: Methods of taking and preparing samples of cement
- EN 196-8: Methods of testing cement - Part 8: Heat of hydration - Solution method
- EN 196-9: Methods of testing cement - Part 9: Heat of hydration - Semi-adiabatic method
- EN 196-21: Methods of testing cement - Part 21: Determination of the chloride, carbon dioxide and alkali content of cement
- EN 197-1: Cement - Part 1: Composition, specifications and conformity criteria for common cements
- EN 197-2: Cement - Part 2: Conformity evaluation

- EN 933-1: Determination of particle size distribution – Sieving method
- EN 933-3: Determination of particle shape. Flakiness index
- EN 933-5: Determination of percentage of crushed and broken surfaces in coarse aggregate particles
- EN 933-8: Assessment of fines. Sand equivalent test
- EN 933-9: Assessment of fines. Methylene blue test
- EN 934-2: Admixtures for concrete, mortar and grout: Part 2: Admixtures for concrete
- EN 1008: Mixing water for concrete
- EN 1097-2: Tests for mechanical and physical properties of aggregates. Methods for the determination of resistance to fragmentation
- EN 1367-1: Tests for thermal and weathering properties of aggregates. Determination of resistance to freezing and thawing
- EN 13286-1, 2, 3, 4, 5: Unbound and hydraulic bound mixtures: Tests methods for laboratory dry density and water content
- EN 13286-40, 41, 42, 43: "Unbound and hydraulic bound mixtures: Tests methods for determination of direct tensile strength, compressive strength, indirect tensile strength, modulus of elasticity
- EN 1744-1: Tests for chemical properties of aggregates. Chemical analysis
- EN 17892-12: Atterberg limits

General

This section covers the supply of constituent materials, design of mixes, grading, transport, placing, compaction and finishing of hydraulic bound mixes required in the works.

Definition of the cement bound mix

Specifications required to guarantee the quality of the cement bound mix are those indicated in the EN 14227-1, supplemented by the following clauses, according to the use and the place of the material in the pavement.

Mix #	**Pavement Layer**	**Mixture designation**
1	Base course	CBM 0/31,5

Definition of the cement bound mix

Before the start of any work on the site, the Contractor shall provide samples of all the constituent materials to be used in the cement bound mix and shall furnish evidence that they comply with the the Technical Specifications.

Aggregates

The Contractor shall provide the Engineer results of tests by an approved laboratory relating to the relevant properties of the aggregates to be used in the works. The testing shall be repeated in accordance with EN 13242 or when the source of material is changed.

Aggregates are natural aggregate conform to EN 13242. Recycled aggregates are allowed for proportion less than 20%.

The Contractor shall inform the Engineer of any modification that occurred in the aggregate production.

General properties

For each unbound mix, the nominal size of the largest aggregate (Dmax) is proposed and justified by the Contractor for proposed mix design. In all cases Dmax is limited to 31,5 mm for use in the cement bound mixes.

Cement

Cement shall be conforming to EN 197-1, CEM1 class 32.5N, 42.5N or 52.5N.

The Contractor shall furnish test certificates relating to the cement to be used in the works. Each certificate shall indicate results of tests and analyses by an approved laboratory and shall state that cement complies in all respects with the requirements.

The Contractor shall keep 10 kg samples of each cement type.

The Contractor is cautioned that the quality of cement may vary sufficiently between batches to necessitate adjustments in the cement content of mixes. In order to ensure a uniform quality of cement bound mix, the Contractor shall obtain from the manufacturer the relevant cement quality data for each batch for the purpose of ascertaining the required adjustment in cement content. The Engineer may order additional tests such as:

- Identification.
- Setting duration.
- Bending – compression strength at 7 and 28 days.
- Hydration heat.

Other hydraulic binders such as fly ash (pulverized fuel ash), slag, puzzolanes etc. can also be used for the base course stabilization according to EN 450 -1 standard, if the laboratory tests prove their usability, after approval of the mix design by the Engineer.

Water

Mixing shall be conforming to EN 1008.

Sources shall be specifically listed, approved by the Engineer and retested at such intervals as the Engineer may direct.

Admixtures

Admixtures shall not be used without the approval of the Engineer, who may require tests to be carried out before the approval in order to prove the suitability of the admixtures.

The Contractor shall keep a sample of each product at the beginning of their use.

In all cases, the Contractor shall submit to the Engineer full details of the admixture to be used and the manner in which he proposes to add it to the mix.

All admixtures shall be clearly identified and incorporated into the mix design. All admixtures shall conform to EN934-2.

Mix design

The mix design will be defined by the Contractor through a laboratory study demonstrating the compliance of the mix with the present specifications.

The Engineer will approve temporarily the mix to be used; acceptance will be issued after the approval of the trial section.

The cement bound mix shall respect the following specifications according to standard EN 14227-1, independently of the hydraulic binder and/or cement class chosen

Regarding the strength properties of the mix, the Contractor shall use system II. However, the contractor can submit to the Engineer before the start of the works sufficient reasons, results and evidence to justify the use of system I. This would result in amending the quality control of the present specifications to follow system I for the whole duration of the production and site works. The amendment shall be entire responsibility of the Contractor and shall be proposed to the approval of the Engineer.

Property	CBM 0/31,5
Minimum binder content	3%
Compressive strength according to system I Compressive strength according to EN 13286-41 at 28 days Cylinder H/D=2 Compressive strength according to EN 13286-41 at 28 days Cylinder or Cube H/D=1	 8 MPa 10 MPa
Compressive strength according to system II Area	 T3
Minimum direct tensile strength according to EN 13286-40 at 28 days Elastic modulus according to EN 13286-43 at 28 days	0.36 MPa 2000 MPa

Requirements for cement bound mix

A sample of granular stone material with an approximate amount of cement shall be compacted by the modified Proctor's method energy (2.66 MNm/m3). The test result shall be the optimum moisture, i.e. the amount of water necessary for the achievement of maximum compaction of the stabilizing mixture with the given energy, which is also sufficient for the hydration of the binder. Granular stone material stabilized mixture shall be placed into the base course at the optimum moisture or at optimum moisture increased up to 1 %.

The maximum dry volume mass obtained by the modified Proctor's method shall be used as the parameter in determining the degree of compaction of the incorporated granular stone material stabilized by cement into the CBM.

Production

Aggregates to be used in cement bound base course shall be produced by crushing rock mass obtained by blasting, or by crushing larger size gravel and boulders in a crushing plant.

Natural gravel or natural detritus for cement bound mix execution shall be obtained by sifting out the upper fractions that can be crushed to respective grain size.

If the produced or natural stone material lacks particles of specific size, the grain size distribution can be corrected by adding granular stone of specific fractions. The stone material mixture shall be well homogenized.

Production plant

The cement bound mix shall be produced in a mixing plant with a production rate of at least 150 t/h. The plant proposed by the Contractor will be submitted to the Engineer for acceptance.

The mixing plant used for the production of cement bound mixes shall be agreed and authorised.

When proposing the plant to the acceptance, the Contractor shall prove its recent control, calibration and tuning, to demonstrate the plant is working according to the specified tolerances. All plants shall be equipped with storing Silo of at least 30 t capacity.

A data acquisition system shall allow collecting at least the following data, proving the correct functioning of the plant:

- Setting of the aggregate supplies
- Rate of production and output, working hours and stops,
- Temperature of bitumen and mix
- Quantity of mix produced
- Proportion of constituents (binder and aggregate fractions)

Storage and handling materials

The Contractor shall make the required arrangements to maintain the quality of the material during storage and handling, avoiding segregation and contamination.

Material that has deteriorated or that has been contaminated or otherwise damaged shall not be used in the cement bound mix. Such materials shall be removed from the site without delay.

The production shall be supplied by a single cement source with a daily capacity compatible with the maximum production of the works. Supply from different sources simultaneously is forbidden. The eventual change of supplier shall be done in clearly separated phases of the works and requires complete new mix design to be submitted for an approval.

Cement shall be stored in silos of a total capacity of at least 1.5 times the maximum daily production.

Transport

The Contractor shall install on his production site, for the whole duration of the works a scale allowing the weighting of each truck in one operation and the deliverance of weighting receipt with the day and hour of truck charging as well as identification of the production plant.

The cement bound mix shall be discharged from the mixer and transported to the works by means of tipper trucks which shall prevent adulteration, segregation or loss of ingredients, and which shall ensure that the material is of the required workability at the point and time of placing.

No cement bound mix that has partially hardened during transit shall be used in the works and the transport of concrete from the mixer to the point of placing shall be such that this requirement can be complied with.

The time elapsing between mixing and placing a batch of cement bound mix shall be as short as practicable and, in any case, not longer than will permit completion of placing and compaction before the onset of initial set. If the placing of any batch of mix is delayed beyond this period, the cement bound mix shall not be placed in the works.

Transport of material should be in accordance with the general quality requirements of the contract. The transport routes on site and off site between the production area and the laying location will be submitted to priori acceptance to the Engineer.

On the capping layer and moreover all the intermediate pavement layers, the heavy vehicles shall respect the law on road safety and in particular the axle load limitations prescribed on public roads.

The Contractor shall maintain any off-site transport routes and get prior approval for their use and improvement from the Engineer of their operation and maintenance.

Weighting and transport means proposed by the Contractor will be submitted for acceptance to the Engineer.

Laying and compacting

The laying area shall be in constant telephone liaison with the production site.

The supporting layer shall be humidified if required, according to meteorological conditions before placing of the cement bound mix. The placing shall be done in full width of slab area and in one single layer, in

such a way that a total thickness 2-3 cm in excess of final required thickness is obtained before final finishing.

In case the platform width is increased above typical cross-section (parking area) the placing of the main circulated carriageway area shall be done full width, joints being permitted on the adjacent areas only.

Compaction is carried out immediately after placing and before final regulating of the cement bound mix by vibrating machines: plate vibrator, compactors, vibratory rollers, or pneumatic-tired rollers, or a combination of these.

After laying of the material, compaction shall be done carefully over the complete layer surface. Surface of the course after the final compacting shall be even, well sealed, without longitudinal marks or cracks.

The places not reachable by heavy compacting machinery shall be compacted by other means in accordance with the requirements.

Special attention shall be given to proper and complete compacting near the longitudinal and transverse joints. In case of flexible pavement structures, longitudinal joints shall be under the centreline, lines that divide the carriage lanes and the borderlines.

All areas where the material segregation is obvious, as well as places where damage to the course occurred as a result of insufficient maintenance, site traffic, weather conditions, additional work etc. shall be replaced in full course thickness and adequately compacted.

At the end of each working day, a vertical cross-joint is prepared by cutting the layer at the edge. This is performed as the last operation at the end of the working day or as the first operation at the beginning of the next working day.

All requirements for the placed course shall be fulfilled before placing the next course.

Weather Condition

Laying is authorised on humid surfaces. It is forbidden on a surface with or covered with snow or presenting water puddles.

Laying is subject to prior authorisation by the Engineer in the following cases:

- if the temperature at 7 am is lower than 0°C,
- if wind speed exceeds 50 km/h.

Laying of unbound mixes is postponed during storm, heavy rain or limited but continuous rain.

In case of violent storms during laying the Engineer can order the removal of the cement bound mix that would have incurred damages.

Finishing

The finishing of the cement bound base course shall be performed with automatic and guided equipment type grader, guided by fixed references (laser or fixed wires) distance by maximum 5 m.

Immediately after compaction and final regulating of the layer of cement bound mix, and in all cases, during the same day, the layer shall be covered with prime coat. Composition and specifications of Prime coat are given in chapter E.4 of the present specifications.

According to weather conditions, in case of important drying during laying a moderate but continuous spraying shall be put in place. If, before spraying of the prime coat, the surface is not humid, it shall be humidified.

Final Layers Properties

The final properties of the layers shall be the following:

Property	CBM 0/31,5 Base
Water content	W (theoretical water content) ±10%
Binder content	b (theoretical binder content) ±5%
Thickness	e (theoretical thickness) ± 2
Levelling	z (theoretical level) ± 2 cm
Local deformations - transverse - longitudinal	 2 cm 1 cm
Width Width from the theoretical edges of the layer Total width of the layer	 W (theoretical width) ± 5 cm W < measured width < W+10

Final Layer properties

Acceptance tests

Acceptance tests are full-size tests performed on cement bound mix samples for base course layer produced with the equipment of the site, and not in laboratory (as tests perform during mix design), before the start of any laying work on site.

All cement bound mix shall be subject to acceptance tests.

Acceptance tests shall be renewed in case of change of product supplier or significant modification in the properties of one product.

Quality control

The quality control of the constituent materials, the mix and the final layer achieved is part of the scope of services of the Contractor and carried out following the present specifications.

Provision of Records:

The Contractor shall maintain written records that provide the following:

(i) Date on which each section was laid, volume of material used and its origin (in particular if several material origins are used in parallel) and the position of the section in the works.

(ii) Daily maximum and minimum temperatures.

(iii) Nature of samples and dates on which they were taken, including identification marks.

(iv) Results of tests on samples taken.

Quality hold points

The following supplements the requirements of General Specification Clause 103.

The quality plan shall include details of approval procedures, hold points and witness points, including advance notice duration.

6.4. Tack coat and prime coat

6.4.1. Applicable standards

- EN1428: Methods of test for petroleum and its products. Bitumen and bituminous binders. Determination of water content in bitumen emulsions. Azeotropic distillation method
- EN1429: Methods of test for petroleum and its products. Bitumen and bituminous binders. Determination of residue on sieving of bitumen emulsions and determination of storage stability by sieving
- EN13808: Framework for specifying cationic emulsions
- EN12846: Methods of test for petroleum and its products. Bitumen and bituminous binders. Determination of efflux time of bitumen emulsions by the efflux viscometer method
- EN13075-1: Methods of test for petroleum and its products. Determination of breaking value of cationic bitumen emulsions, mineral filler method
- NF P 98-275-1 : Emulsions: Mean Dosage and transverse regularity

Use of Interfaces

The following interfaces shall be used the placing of the layer:

Layer #	Pavement Layer	Before placement	After placement
1	Bituminous Wearing course	Tack Coat	-
2	Bituminous Binder Course	Tack Coat	Tack Coat
3	Bituminous Base Course	Tack Coat	Tack Coat
4	Cement bound base course	Prime coat	Prime coat
5	Capping Layer / Unbound Gravel	Prime coat	-

Type of interface used after placing of each layer

Binder

The binders to be used are bitumen cationic emulsions at 65 % binder content and quick settling according to standard EN 13808-2.

Aggregates

In case spreading of aggregates should be required on top of the tack coat, to protect it, the aggregates to be used shall be:

Property	Specification
Gravel size (d/D)	4/6
Tolerances on the grading curve declared by the Contractor	±15
Passing at sieve 2D for stone grit (%)	100
Passing at sieve 1.4D for stone grit (%)	98-100
Passing at sieve D for stone grit (%)	85-99
Passing at sieve d for stone grit (%)	0 – 20
Passing at sieve d/2 for stone grit (%)	0 - 5
Fines content (0.063) (%)	< 1
Mechanical resistance LA, EN 1097-2	<30
Flakiness index EN 933-3	<25
Crushing index EN 933-5	> 100%

Type of aggregates to be used for interfaces

Composition

Tack coat will be an emulsion layer with 250 g/m2 residual bitumen.

Prime coat will be a n emulsion layer with 400 – 800 g/m2 residual bitumen.

In the case where the spreading of aggregates is specifically required by the Engineer, then it will be done at 4 l/m2 of gravel 4/6.

Laying

Spraying of bitumen emulsion shall be accomplished by power sprayers, which enable unified distribution of bitumen emulsion across the surface. Manual spraying shall be allowed on places that are not accessible by power sprayers.

In case of aggregates spreading shall be done using a gravel spreader.

Prior to emulsion spray, surface of the course shall be clean and dry, with no evidence of excess moisture.

Spraying of bitumen emulsion shall not be allowed during rainfall, i.e. during relative air humidity greater than 75 %

The temperature on top of the existing pavement layer shall be above 5°C.

The temperature of the binder shall be between 50°C and 70°C during storage and laying.

Quality control

The Contractor has the responsibility of the quality of the emulsion used, and will present to the Engineer all justifications to check its conformity.

The following properties of the bitumen emulsion shall be submitted as resulting from production testing not older than 6 months:

Viscosity	EN 12846
Percentage of binder	EN 1428
Degree of stability	EN 13075-1
Homogeneity	EN 1429
Storage stability	EN 1429
Bitumen coating under water	EN 13614-2

Binder properties for binders to be used for interfaces

The Contractor shall carry out verifications on the regularity of the spreading using spot checks. The tolerances to be respected compared to the theoretical values are the following:

binder: - prescribed quantity : ± 100 g/m2
transverse regularity (NF P 98-275-1): ±10 %
aggregates: - prescribed quantity: ±1 l/m2
transverse regularity (NF P 98-275-1): ±15 %

6.5. Concrete slabs

6.5.1. Applicable standards

- EN 196-1: Methods of testing cement - Part 1: Determination of strength
- EN 196-2: Methods of testing cement - Part 2: Chemical analysis of cement
- EN 196-3: Methods of testing cement - Part 3: Determination of setting time and soundness
- EN 196-6: Methods of testing cement - determination of fineness
- EN 196-7: Methods of testing cement - Part 7: Methods of taking and preparing samples of cement
- EN 196-8: Methods of testing cement - Part 8: Heat of hydration - Solution method
- EN 196-9: Methods of testing cement - Part 9: Heat of hydration - Semi-adiabatic method
- EN 196-21: Methods of testing cement - Part 21: Determination of the chloride, carbon dioxide and alkali content of cement
- EN 197-1: Cement - Part 1: Composition, specifications and conformity criteria for common cements
- EN 197-2: Cement - Part 2: Conformity evaluation
- EN 206-1: Concrete, Part 1 – specifications, performances, production and conformity
- EN 933-1: Determination of particle size distribution – Sieving method
- EN 933-3: Determination of particle shape. Flakiness index

- EN 933-5: Determination of percentage of crushed and broken surfaces in coarse aggregate particles
- EN 933-8: Assessment of fines. Sand equivalent test
- EN 933-9: Assessment of fines. Methylene blue test
- EN 934-2: Admixtures for concrete, mortar and grout: Part 2: Admixtures for concrete
- EN 1008: Mixing water for concrete
- EN 1097-2: Tests for mechanical and physical properties of aggregates. Methods for the determination of resistance to fragmentation
- EN 1367-1: Tests for thermal and weathering properties of aggregates. Determination of resistance to freezing and thawing
- EN 1744-1: Tests for chemical properties of aggregates. Chemical analysis
- EN 10080: Steel for the reinforcement of concrete - Weldable reinforcing steel – General
- EN 10025-1: Hot rolled products of structural steels. General technical delivery conditions
- EN 10027-1: Designation system for steels. Steel names
- EN 10027-2: Designation system for steels. Steel numbers
- EN 12350-2: Testing fresh concrete - Part 2: Slump test
- EN 12350-5: Testing fresh concrete - Part 5: Flow table test
- EN12350-7: Testing fresh concrete. Air content. Pressure methods
- EN 12359-7: Testing fresh concrete - Part 7: Air content - Pressure methods
- EN 12390-1: Testing hardened concrete - Part 1: Shape, dimensions and other requirements for specimens and moulds
- EN 12390-2: Testing hardened concrete - Part 2: Making and curing specimens for strength tests
- EN 12390-3: Testing hardened concrete. Compressive strength of test specimens
- EN 12390-5: Testing hardened concrete. Flexural strength of test specimens
- EN 12390-6: Testing hardened concrete. Tensile splitting strength of test specimens
- EN 12390-9: Testing hardened concrete. Freeze-thaw resistance
- EN 13620: Aggregates for concrete
- EN 13877-1: Concrete Pavements - Materials
- EN 13877-2: Concrete Pavements – Functional Specifications
- EN 13877-3: Concrete Pavements – Specifications for the dowels
- EN 14188-1: Joint fillers and sealants Part-1: Specifications for hot applied sealants

- EN 14188-2: Joint fillers and sealants Part-1: Specifications for cold applied sealants
- EN 14188-3: Joint fillers and sealants Part-1: Specifications for preformed joint seals
- EN14754-1: Curing products – Test methods – Part 1: determination of retained water, efficiency of curing product
- EN 17892-12: Atterberg limits

General

This section covers the supply of constituent materials, design of mixes, grading, transport, placing, compaction and finishing of cement concrete required in the works.

Definition of the Cement Concrete

Specifications required to guarantee the quality of the cement concrete mix are those indicated in the EN 13877-1, supplemented by the following clauses, according to the use and the place of the material in the pavement.

Mix #	Pavement Layer	Mixture designation (EN)	Exposure class	Maximum Water-cement ratio	Minimum quantity of cement	Layer thickness
1	Foundation under sidewalk	C16/20	XC2	0.5	260 kg/m3	4 cm
2	Parking Area	C25/30	XF4	0.5	300 kg/m3	21 cm
3	Handling / Manoeuvring	C30/37	XF4	0.5	340 kg/m3	23 cm
4	Storage Area	C30/37	XF4	0.45	340 kg/m3	20 cm

Cement concrete

Before the start of any work on the site, the Contractor shall provide to the Engineer for approval, samples of all the constituent materials to be used in the cement concrete and shall furnish evidence that they comply with design requirements.

All constituents of the cement concrete shall conform to EN206-1.

Aggregates

The Contractor shall provide the Engineer with results of tests for properties of the aggregates by an approved laboratory. The testing shall be repeated in accordance with EN 13620 or as directed by the Engineer or when the source of material is changed.

Aggregates are natural aggregate conforming to EN 13620.

Recycled aggregates are allowed in proportion less than 20% by weight of the total aggregates in the mix.

The Contractor shall inform the Engineer of any modification that occurred in the aggregate production.

<u>General Properties</u>

For the cement concrete, the nominal size of the largest aggregate (Dmax) is proposed and justified by the Contractor in proposed design, which will also indicate the grain size distribution.

In all cases Dmax is limited to 20 mm for use in the cement concrete. For the use in the foundation of the sidewalk, Dmax is limited to 10 mm.

Property	C16/20	CC 25/30	CC30/37
Flakiness index according to EN 933-3	FI35	FI20	FI20
Shape index According to EM 933-4	SI40	SI20	SI20
Material finer than 0.063 mm in fine aggregates (EN12620)	f10	f3	f3
Material finer than 0.063 mm in coarse aggregates (EN12620)	f4	f1.5	f1.5

General properties of the aggregates

Mechanical and Chemical Properties

Property	CC 16/20	CC 25/30	CC30/37
Mechanical resistance LA according to EN 1097-2	LA30	LA20	LA20
Resistance to fragmentation according to EN 1097-2	SZ32	SZ22	SZ22
Mechanical resistance MDE according to EN 1097-1	-	MDE25	MDE25
Mechanical resistance CPA according to EN 1097-8	-	CPA56	CPA56
Abrasion according to EN 1097-8	-	AAV15	AAV15
Coarse aggregate: Frost sensitivity according to EN	F4	F2	F2
Maximum soluble sulphate content according to EN	AS ≤ 0.8	AS ≤ 0.8	AS ≤ 0.8
Maximum total sulphur content according to EN 1744-1	S ≤ 1	S ≤ 1	S ≤ 1

Granular material shall not contain more than 2 % of organic matter and lightweight particles, e.g. wood pieces, roots, coal, etc

Cement

Cement shall conform to EN 197-1, CEM1 class 32.5N, 42.5N or 52.5N.

The Contractor shall furnish test certificates relating to the cement to be used in the works. Each certificate shall indicate results of tests and analyses by an approved laboratory and shall state that cement complies in all respects with the requirements of the present specifications.

In case the concrete will be exposed to de-icing products as salt and similar, the content of C3A shall be according to the type of aggregates:

- Silica or silica-limestone C3A < 5%
- Eruptive or mixed C3A < 7%
- Limestone C3A < 10%

The Contractor shall keep 10 kg samples of each cement type.

The Contractor is cautioned that the quality of cement may vary sufficiently between batches to necessitate adjustments in the cement content of mixes. In order to ensure a uniform quality of concrete, the Contractor shall obtain from the manufacturer the relevant cement quality data for each batch for the purpose of

ascertaining the required adjustment in cement content. This information shall be submitted to the Engineer. The Engineer may order additional tests such as:

- Identification.
- Setting duration.
- Bending – compression strength at 7 and 28 days.
- Hydration heat.

Other hydraulic binders such as fly ash (pulverized fuel ash), slag, puzzolanes etc. can also be used for the base course stabilization according to EN 450 -1 standard, if the laboratory tests prove their usability, after approval of the mix design by the Engineer.

Reinforcement Steel

Steel Bars

Reinforcing bars are high yield strength deformed ribbed weldable steel.

The steel grade is 500 MPa (characteristic yield strength). Bars shall comply with EN 10080. Ductility class B according to Eurocodes EN 1992.

Welded fabrics are not allowed in structural works.

For the placement in the longitudinal anchor joints of the storage slab, the bars shall be 800mm long, with plastic coating on the central 200mm.

Dowel bars

Dowel bars are of steel type S 235 J2G3 according to EN 10027-1, diameter of 25 mm and length 500mm or other dimensions according to the Contractor's drawings.

Dowel bars shall comply with EN 10025 and be plastic coated.

The Contractor shall submit test certificates from a recognized testing authority to the Engineer, certifying that the dowel bars offered comply with the specified requirements. All dowel bars used and their placement schedule shall be subject to the approval of the Engineer.

Water

Mixing water shall conform to EN1008.

Sources shall be specifically listed, approved by the Engineer and retested at such intervals as the Engineer may direct.

Admixtures

Admixtures shall not be used without the approval of the Engineer, who may require tests to be carried out before the approval in order to prove the suitability of the admixtures.

The Contractor shall keep a sample of each product at the beginning of their use.

In all cases, the Contractor shall submit to the Engineer full details of the admixture to be used and the manner in which he proposes to add it to the mix.

All admixtures shall be clearly identified and incorporated into the mix design. All admixtures shall conform to EN934-2.

Mix design

The mix design shall be defined by the Contractor through a full laboratory study demonstrating the compliance of the mix with the present specifications.

The Engineer will approve temporarily the mix to be used; full acceptance will be issued after the approval of the trial section.

The cement concrete shall respect the following specifications according to standard EN 13877-1, independently of the cement class chosen.

Property	CC16/20	CC 25/30	CC 30/37
Maniability (NF P 18-452)	15 - 20 s	15 - 20 s	15 - 20 s
Slump test (EN 12350-2)	S2	S1	S1
Air Content (EN 12350-7)	3 %	3.5 %	4 %
Strength class Tensile Splitting Strength according to 12390-6 at 28 days Cylinder H/D=2 (300mm / 150mm)	-	Minimum f_{sk} > 2.4 MPa Average f_{sk} > 2.7	Minimum f_{sk} > 2.7 MPa Average f_{sk} > 3 MPa
Bending strength according to EN 5 at 28 days Cylinder H/D=2 (300mm / 150mm)		Minimum f > 3.3 Average f> 4 MPa	Minimum f > 4 MPa Average f> 5 MPa

Requirements for cement concrete

The mix design for C25/30 and above shall enable to produce a mix suitable for wearing courses, with the appropriate surface characteristics. This requires indicatively a minimum of 450 kg/m3 of gravel of fractions 2/6.3.

Production

Aggregates to be used in cement concrete surface course shall be produced by crushing rock mass obtained by blasting, or by crushing larger size gravel and boulders in a crushing plant.

Natural gravel or natural detritus for cement concrete mix execution shall be obtained by sifting out the upper fractions that can be crushed to respective grain size.

If the produced or natural stone material lacks particles of specific size, the grain size distribution can be corrected by adding granular stone of specific fractions. The stone material mixture shall be well homogenized.

Production plant

The cement concrete shall be produced in a mixing plant with a production rate more than 100 m3/h. Mixing Plant and area proposed by the Contractor shall be submitted to the Engineer for acceptance. The batching plant used for the production of cement concrete shall be agreed and authorised.

The Contractor when proposing the plant for the acceptance of the Engineer shall prove its recent control, calibration and tuning, to demonstrate the plant is working according to the manufactured specified tolerances. All plants shall be equipped with storing Silo of at least 15 m3 capacity

A data acquisition system shall allow collecting at least the following data, proving the correct functioning of the plant:

- Setting of the aggregate supplies
- Rate of production and output, working hours and stops,
- Temperature of bitumen and mix
- Quantity of mix produced

Proportion of constituents (binder and aggregate fractions) The total capacity of the plant(s) shall not be lower than 150 m3/h.

Storage and handling materials

The Contractor shall make the required arrangements to maintain the quality of the material during storage and handling, avoiding segregation and contamination.

Material that has deteriorated or that has been contaminated or otherwise damaged shall not be used in the cement bound mix. Such materials shall be removed from the site without delay.

The production shall be supplied by a single cement source with a daily capacity compatible with the maximum production of the works. Supply from different sources simultaneously is forbidden. The eventual change of supplier shall be done in clearly separated phases of the works and requires new mix design to be submitted to the approval of the Engineer.

Cement shall be stored in silos of a total capacity of at least 1.5 times the maximum daily production.

Transport

The Contractor shall install on his production site, for the whole duration of the works a scale allowing the weighing of each truck in one operation and the deliverance of weighing receipts with the day and hour of truck charging as well as identification of the production plant.

The cement concrete mix shall be discharged from the mixer and transported to the works by means of tipper trucks which shall prevent adulteration, segregation or loss of ingredients, and which shall ensure that the material is of the required workability at the point and time of placing.

At the place of unloading, the drop height shall be less than 1.5m to avoid segregation.

No cement concrete that has partially hardened during transit shall be used in the works and the transport of concrete from the mixer to the point of placing shall be such that this requirement can be complied with.

The time elapsing between mixing and placing a batch of cement concrete shall be as short as practicable and, in any case, not longer than will permit completion of placing and compaction before the onset of

initial set. If the placing of any batch of mix is delayed beyond this period, the cement concrete shall not be placed in the works.

Transport of material should be in accordance with the general quality requirements of the contract. The transport routes on site and off site between the production area and the laying location shall be submitted for prior acceptance to the Engineer.

On the capping layer and moreover all the intermediate pavement layers, the heavy vehicles shall respect the law on road safety and in particular the axle load limitations prescribed on public roads.

The Contractor shall maintain any off-site transport routes and get prior approval for their use and improvement from the Engineer of their operation and maintenance.

Weighing and transport means proposed by the Contractor shall be submitted for acceptance to the Engineer. Final acceptance will be issued after the trial section has been successfully executed.

Laying and compacting

All plant and equipment to be used for the placing and finishing of the cement concrete layer shall be calibrated and verified according to the standards and manufacturers specifications. All plant and equipment shall be submitted to the approval of the Engineer before its use on site.

The laying area shall be in constant telephone liaison with the production site. According to the surface to be placed in each location, the laying can be accepted to be

- manual, in this case the equipment includes at least a formwork and a surface vibration equipment, based on the formwork, including always vibrating needles
- mechanical, using a slipform

In case the platform width is increased above typical cross-section the placing of the main carriageway shall be done on full lanes, joints being permitted across the lanes on the adjacent area only.

The posts of the guide for the levelling are spaced less than 10 m in the straight sections, and less than 5 m in the curves with radius under 2000 m. The tension of the rope is such that there is no deformation above 3 mm at the centre of the rope between two posts.

The edge of the slab is allowed to drop by 1 cm if the lane is isolated and 0.5 cm if there is an adjacent lane.

The placing shall be done in full width of lanes and in one single layer.

All areas where the material segregation is obvious, as well as places where damage to the course occurred as a result of insufficient maintenance, site traffic, weather conditions, additional work etc. shall be replaced in full course thickness and adequately compacted.

At the end of each working day, a vertical construction joint is prepared and formed transversally to the axis of the carriageway. The concrete, its density and the deformation of the slab near the construction joints has to be identical to the characteristics to be achieved in the current section.

Finishing

Finished concrete surfaces shall meet the following requirements, in addition ot the final layers properties of section E.5.13 below:

- The surface shall have uniform, closed texture, smooth, and without pores if possible,
- Oblique concrete surfaces shall be uniform,
- The size of members shall be maintained strictly, and their corners and edges shall not be damaged,
- Construction joints made due to interrupted work, change of concrete class, or transition into another form of element shall be inconspicuous and constructed perfectly,
- Visible surfaces of concrete members shall be flat and smooth.

Joints

The arrangements and spacing of joints (transversal and longitudinal, and construction joints) shall be submitted to the approval of the Engineer and conform to the following:

Transverse reflection joints and transverse construction joints

Spacing between reflection joints shall be constant and equal to 4,50 m. The depth of the saw cut shall be 1/3rd of the depth of the slabs.

Daily construction joints shall be formed through a plane formwork using dowels of 30 mm diameter, 42 cm length minimum at 30 cm spacing.

Longitudinal reflection joints

Depth of the longitudinal reflection joints shall be 10 cm and a width of 1 mm to 5 mm depending of the type of sealant. The joint shall be placed between the limits of the traffic lanes.

Water stop

For the joints located in the storage area for dangerous goods and the adjacent retention pond and additional placing of a water stop across the joints shall be required to ensure complete water proofing.

The type and placing of water stops shall be submitted to the approval of the Engineer before supplying and placing.

The water stop shall be a preformed PVC joint, with width of 20 cm, to be placed either side of the joints.

The water stop shall form a uniform network to be efficient, through heat-welding on site. The following technical conditions shall be respected:

Tensile strength $\geq$ 14 N/mm²

Elongation at break $\geq$ 300%

Specific gravity $\geq$ 1.3 kg/dm3

Before the placing of the concrete, the water-stop is laid onto the foundation (geotextile) and blocked with scantlings. Alternatively, the water-stop can be wired onto the reinforcement, if the product selected offers this feature.

In all cases, the product has to be securely fastened and held in place during concrete pouring. The concrete placement shall be done with particular care, to avoid irregularities and voids near the water-stop.

Final layers properties

The final properties of the layers shall be the following:

Property	Sidewalk Foundatio	Parking Area	Manoeuvring Area	Storage Area
Thickness (cm)	e (theoretical thickness) + 1 cm / -1 cm	e (theoretical thickness) + 1 cm / -1 cm	e (theoretical thickness) + 2 cm / -0 cm	e (theoretical thickness) + 2 cm / -0 cm
Levelling	z (theoretical level) ± 2 cm	z (theoretical level) ± 2 cm	z (theoretical level) ± 2 cm	z (theoretical level) ± 1 cm
Local deformations - transverse - longitudinal	 1 cm 0.8 cm	 0.8 cm 0.5 cm	 0.8 cm 0.5 cm	 0.5 cm 0.3 cm
Width - width from the theoretical edges of the layer Total width of the layer	W (theoretical width) ± 3 cm W < measured width < W+5	W (theoretical width) ± 3 cm W < measured width < W+5	W (theoretical width) ± 3 cm W < measured width < W+5	W (theoretical width) ± 3 cm W < measured width < W+5
Macrotexture (PMT according to EN 13036-1)	N/A	> 0.7	> 0.7	N/A
Skid resistance (pendulum according to 13036-4)	N/A	> 0.5	> 0.5	N/A

Final Layer properties

Acceptance Tests

Acceptance tests are full-size tests performed on cement concrete samples for surface course layers produced with the equipment of the site, and not in laboratory (as tests perform during mix design), before the start of any laying work on site.

All cement concrete C25/30 and above shall be subject to acceptance tests.

Acceptance tests shall be renewed in case of change of product supplier or significant modification in the properties of one product.

Quality Control

General

The quality control of the constituent materials, the mix and the final layer achieved is part of the scope of services of the Contractor and carried out following the present specifications.

Provision of records:

The Contractor shall maintain written records that provide the following:

- Date on which each section was laid, volume of material used and its origin (in particular if several material origins are used in parallel) and the position of the section in the works.
- Daily maximum and minimum temperatures.
- Nature of samples and dates on which they were taken, including identification marks.
- Results of tests on samples taken.

Quality hold points

The quality plan shall include details of approval procedures, hold points and witness points, including advance notice duration. The minimum list of hold points is given in the table bellow.

Work Phase	Hold Points
Setting Out	Staking out approval.
Production of cement concrete	Conformity of aggregates (material, supplier, characteristics) Conformity of cement (supplier and product characteristics) Acceptance of plant area, handling and storage arrangements Conformity of mix design Conformity of plant
Plain Cement concrete slabs	Conformity of the quality of the bottom of the layer: levelling, thickness and quality of the underlying layer. Conformity of the layer materials. Acceptance of plant and equipment arrangements Acceptance of Transport arrangements Acceptance of Trial section results on laying, curing and final

Hold points of cement concrete

6.6. Non-woven geotextile under storage slab

6.6.1. Applicable Standards

- EN 13249:2011 : Geotextiles and geotextile-related products. Characteristics required for use in the construction of roads and other trafficked areas (excluding railways and asphalt inclusion)
- German regulations ZTV Beton – St B 01 and TL Geok E-StB 05

Use of geotextile

The work includes procurement, transport, placing and adjusting of non-woven geotextile in the places by the design drawings.

The non-woven geotextile shall be placed generally between the cement bound base course and the concrete slab in the storage area.

The geotextile shall be according to products of EN 13249, CE marked.

Geotextiles required shall be manufactured from polymer fibers as required and be in the form of thin permeable membranes.

The Contractor shall provide evidence to the Engineer, before the geotextile is incorporated in the Permanent Works, that the geotextile will be sufficiently durable, when installed, to maintain its integrity for at least the 10-year life period

Main functions of the non-woven geotextile are:

- separation – separation of the cement bound foundation and the concrete slab,
- drainage – discharge of water seeping through the joints to the sides
- bedding function – to cushion and absorb loads

Table below gives the main specifications of non-woven needle-punched geotextile.

Property	Values
Mass per unit area g/m²	450-550
Tolerances of weight (%)	-7
Minimum Thickness(mm) at 20kN/m²	2.0
Tensile strength MD/CMD (kN)	10
Tensile Elongation MD/CMD (%)	< 130
CBR Push-through force (5% quantile)according to ISO12236	> 3.5 kN
Strength class GRC according to	GRC 5 (for coverage by cement concrete)
Opening size(O90), mm	0.06-0.2
Water Permeability k_h in plane under 20 kN pressure (cm/s)	$k_h > 5*10^{-4}$
Water Permeability k_h vertical to plane under 20 kN pressure (cm/s)	$k_V > 1*10^{-4}$
Fabric	100% polyoleofin

Property of geotextile

Supply

Before the start of delivery, the Contractor has to submit the proposed geotextile to the approval of the Engineer, including all relevant recent test certificates of the producer, to prove the product shall comply with the technical specifications.

Laying

The geotextile shall be placed with 30 cm coverage between the bands, and with mechanical or manual systems avoids any folding of the geotextile during placing.

Site traffic is prohibited on the placed geotextile.

Geotextiles shall be protected at all times against mechanical or chemical damage. Those susceptible to damage by light shall not be uncovered between manufacture and incorporation in the Permanent Works.

Quality control

The Contractor shall carry out internal verifications on the regularity of the placing. The Engineer shall verify the laying using visual spot checks on the product used, the laying procedure and the final quality of the surface.

6.6.2. Demolition and reconstruction of service road junction

General

The works include the demolition of the areas to be shown on the Contractor' drawings of the ring road service road to allow connection of the access road part. It includes the demolition of the existing road to allow anchoring of the new structure, evacuation of all excess material and supply and laying of all materials required for the construction of the new junction with pavement structures.

The works include also the preparation of contractors detailed drawings for execution of the demolition and reconstruction, and the required quality control, as for the newly build pavements.

Demolition

At the point of connection to the new pavement structure the existing pavement layers will be demolished down to the formation of the capping layer (top of the earthworks) to enable the achievement of correct connections.

Demolishing of existing pavement, islands and kerbs must be done without traffic interruption.

Existing asphalt layers should be cut into designed width with appropriate equipment, additionally fragmented. During cutting and removing of existing layers, attention should be paid that loose pieces and parts do not remain in place.

Materials from demolition and cutting shall be removed to a final deposit.

Reconstruction

The pavement edge preparation will be carried out by milling and optionally cutting or slicing of pavement layers for the production of steps ingresses of 10 cm width of each layer.

After demolition of pavements, the capping layer shall be reshaped and adjusted to obtain cross- slopes greater than or equal to 2.5%.

The material used for the capping layer shall be 0/63mm according to specifications E.1.

Upon the capping layer, accepted by the Engineer, the pavement structure will be rebuilt in accordance with the pavement structure, using the materials as described in the technical specifications.

Joints shall not be positioned under the traffic lanes and wheel tracks, wherever possible.

7. OUTSIDE ELECTRICAL WORKS

The minimum standard for this project is Turkiye's (local) norms and standards. In case European/International standards are higher than Local standards, European/International standards shall be used.

7.1. Applicable standards

7.1.1. Regulations

- Electric Current Facilities Regulation, Official Newspaper, 30.11.2000, NO: 24246
- Electric Limits Designed for Certain Voltage Limits Regulations Regarding Equipment, Official Newspaper, 02.10.2016, NO: 29845
- Grounding Regulation in Electrical Installations, Official Newspaper, 21.08.2001, NO: 24500
- Road Lighting Lantern and Installation Dataphotometrics, Classification and Performance, CIE Pub. 34
- Calculation and Measurement of Luminance and Illuminance in Road Lighting, CIE Pub. 30.2
- Glare Evaluation System for Use Within Outdoor Sports and Area Lighting, CIE Pub. 112

7.1.2. Standards

- Electrical installation technical guide - Selection and installation of electrical equipment – Dropline systems - Limitation of temperature rise of connection interfaces, CLC /TR 50479:2007
- Calculation of cross-sectional areas of conductors and selection of protection devices, CLC/TR 50480:2011
- Introduction of cores in cables and flexible cords, HD 308 S2:2001
- Low voltage electrical installations-Part 1: Main principles, evaluation of general characteristics and descriptions, HD 60364-1:2008
- Low voltage electrical installations -Part 5 -51: Selection and installation of electrical equipment - Common rules, HD 60364-5-51:2009
- Low voltage electrical installations-Chapter 5-52: Selection and Installation of electrical equipment-Drawn line systems (Conductors), HD 60364-5-52:2011
- Low-voltage electrical installations–Chapter 5 -53: Selection and installation of electrical equipment –Disconnection, switching and control –Part 534: Surge protection devices, HD 60364-5-534:2008
- Low voltage electrical installations – Chapter 5-54: Selection and installation of electrical equipment – Earthing arrangements, protective conductors and equipotential bonding conductors, HD 60364-5-54:2011

- Low voltage electrical installations – Part 5: Selection and installation of electrical equipment – Group 55: Other equipment – Part 551: Low voltage generator sets, HD 60364-5-551:2010
- Low voltage electrical installations–Chapter 5-55: Selection and installation of electrical equipment – Other equipment – Article 559: Fixtures and lighting installations, HD 60364-5-559:2005
- Low voltage electrical installations–Chapter 6: Verification, HD 60364-6:2007
- Low voltage electrical installations–Chapter 7-712: Rules for special installations and locations – Solar photovoltaic (PV) power supply systems, HD 60364-7-712:2005
- Electrical installation in buildings Part 7: Rules for private installations or quarters Part 714: Outdoor lighting installation, HD 384.7.714 S1:2000

7.2. Distribution boards

7.2.1. General

The works include the supply, transport, handling and mounting and connections of distribution boards secured with doors and keys, colored by basic and polish color. Protection level IP 43.

All foreseen equipment has to be CE-marked, and submitted to the Engineer prior to the commencement of supplies and works.

7.3. Cables and trenches

7.3.1. Construction of trenches

Supply

Different pipes and ducts shall be used, according to the Contractor's drawings.

7.4. Electrical network installation

7.4.1. Cabling for lighting

The works include the supply, transport, placing and connecting of buildings to the transformer, generator network and the network for the cameras for video supervision.

7.4.2. Other cabling

The works include the supply, transport, placing and connecting of other external electrical installations networks. Cables are laid in the already prepared trenches.

7.5. Lighting system installation

The works include supply of equipment, transport, storage, handling, installation, connection and putting into operation of the project's lighting system.

7.5.1. Lighting columns

The works include supply, delivery, handling and installation of street lighting columns. The posts are metal, with their foundation according to the product standards and the Contractor's design.

Lighting columns are according to EN 40 Series, and CE-marked.

The type of columns has to be submitted for approval to the Engineer prior to any delivery and works on the site.

All columns shall be supplied with the anchor plate, anchors, anchor bolts, terminal board and fuse FRA, fully wired, finishing according to the approval of the Engineer, all accessories for mounting included as required.

7.5.2. Lights and lamps

The works include supply, delivery, installation and connection of all lights with their electrical connections.

Works include the putting into operation and testing.

The works also cover the delivery and installation of the lamps, installing them and perform the electrical connections, with the appropriate equipment. The material and equipment include the light bulbs, starters, drivers and the standard mounting kit.

7.5.3. Testing and quality control

Testing of the built installations and grounding is organized by the Contractor in order to provide the certificate from an authorized company.

Tests include:

- Grounding resistance measurements
- Continuity of grounding bushings going from roof to ground and cables for potential equalization measurements
- Cable insulation resistance measurements
- Earth fault resistance measurement
- Continuity of protection conductors' measurements
- Control galvanic connection of metal mass

8. TRANSFORMER STATION

8.1. Applicable standards

8.1.1. Regulations

- Electric Current Facilities Regulation, Official Newspaper, 30.11.2000, NO: 24246
- Hermetic Type MV/LV Distribution Power Transformers Technical Specification, 01.04.2018
- Electrical distribution networks, installation of energy cables, TEDAŞ, 24.02.2021
- Electric Limits Designed for Certain Voltage Limits Regulations Regarding Equipment, Official Newspaper, 02.10.2016, NO: 29845

8.1.2. Standards

- AC Metal Enclosed Switchgear and Control Panel for Rated Voltages Between 1kV and 52kV, IEC 60298
- High Voltage AC Circuit Breaker, IEC 60056
- AC Load Disconnectors and Earthing Switches, IEC 60129
- General Standards for High Voltage Switchboards and Control Panels, IEC 60694
- High Voltage Fuses, IEC 60281
- Current Transformer, IEC 60044-1
- Voltage Transformer, IEC 60044-2
- Protection Classes Provided by Cells (IP Code), IEC 60529
- Protection Relays, IEC 60255
- Dry type transformers, TS 7451/IEC 60726
- Loading rules for dry-type transformers, TSIEC 60905
- Power transformers, TS 267/IEC 76
- Dry Type Transformers, HD 464 S1/A2
- Dry Type Transformers, HD 464 S1

8.2. Preparatory construction works

8.2.1. General functional specification of the transformer station

An independent TS is planned for the consumption of the terminal, as an independent facility out of the terminal complex. The final choice of the system and all supplies shall be précised by the Contractor.

Proposed TS should be type "Dry Type".

Measuring of electric energy consumption shall be unique at the level of the entire consumer area, and it will be performed within the TS, with the indirect measuring group equipped with the measuring transformers placed in the MV measuring cell.

The measuring would be performed by semi-indirect measuring group with digital two-tariff counter

The TS facility is planned as a standard standalone power transformer, with an oil pit to accept oil and separate compartments for the HV i.e. LV dismountable plants with direct independent access to each of the parts. The proposed type of TS shall be selected in the way to satisfy the configuration and environmental conditions of surrounding facilities.

In the TS foundation, an earthing rod shall be formed to connect the TSearthing.

The works also include:

- Obtaining approvals and permits for the work:
- ED staff and services involved in supervising the performance of cable water;
- ED RJ competent in obtaining work permits in the TS and MV networks bringing in potential-free status while performing the described work.
- Relevant services for the construction work around the excavation of cable lines;
- Obtaining autorisation of the competent services for eventual derivative works on other lines.

8.3. Grounding and equipotential

The works include supply, delivery, handling, mounting, connecting and installation of all parts required for efficient grounding of the TS.

The elements of grounding and potential equalization system shall be according to the main project depending on the final layout of the building for the TS.

8.4. Safety equipment

The works include the supply, delivery, handling and installation of the safety equipment necessary for safe operation and handling of equipment in the Transformer Station.

The safety equipment has to be submitted to the approval of the Engineer and should include the following items:

- a rubber mat 1.2x16m / 24kV, supplied with protective rubber gloves certified for / 24Kv
- Protective hand first aid kit
- Table warnings with the inscription "Caution - High voltage - life threatening"
- Instructions for first aid the victims of electric shock in a glassed-in metal frame.
- One pole scheme of Transformer Station in the glassed metal frame, which must match the derived condition.
- Insulation handle disconnection / switching HV disconnection, with attest to / 24kV

- Insulation handle for extraction cartridge fuses.
- Portable fire extinguisher CO2 (5kg) with certificates and instructions for firefighting.

8.5. Quality control

The quality includes the testing of substation grounding to obtain the appropriate certificates from the relevant competent authority.

The includes:

- Visual control and high-voltage equipment and HV distribution cells testing to Issue the related certificate and documentation.
- Inspection and testing of power transformer protection for issue of the certificate and documentation
- Inspection and testing of installations in the LV distribution facility.
- Testing of protection against overvoltage by indirect touching the LV for issue of the certificate and documentation
- Final testing and commissioning of the complete substation prior to putting into operation.

9. EXTRA LOW VOLTAGE WORKS

9.1. Applicable standards

Works shall be realized in accordance with applicable Turkish and EU specifications and standards.

- Components of Automatic Fire Detectors (Detectors) Part 4: Power resources, EN 54-4
- Fire Detection and fire alarm systems Part 5: heat detectors – point detectors., EN: 54-5
- Fire detection and alarm systems – part 7: Smoke detectors – Scattered light or ionization-operated point detectors., EN:54-7
- fire detection and fire alarm systems, EN: 54-10
- Flame detectors - Point detectors, EN.4-10/A1
- Fire detection and alarm systems – Chapter 11: Manually operated alarm devices., EN-54-11
- Fire detection and alarm systems –Chapter 12: Smoke detectors –Optical beam beamline detectors., EN: 54-12
- Magnetic tape sound recording and reproduction systems Part 6: From the macro systems to macro, TS HD 311.6 S1
- Magnetic tape sound recording and recording system Chapter 10: Time and address Codes, TS HD 311.10 S1
- Audio - Visual video and television equipment and system Chapter 10: Audio cassette systems, TS HD 369.10 S4
- Color (chrominonia) mark/noise for magnetic tape image recorders (random noise) rate measurement method, TS HD 527 S1
- PCM decoder / encoder sound recording system, TS HD 544 S1
- Telecontrol devices and systems Part 4: Performance characteristics, TS HD 546.4 S1
- Conference systems - Electrical and audio features, TS HD 549 S1
- Type C helical video tape recorders, TS HD 573 S1
- Type B serial video recorders, TS HD 574 S1
- Sound system devices - Part 5: Speakers, TS 976 EN 60268-5

9.2. Functional specifications

The preliminary design stipulates covering all the route for unloading/loading of goods near the railway line, as well as on truck entrances/exits from the terminal with video supervision. The purpose of the designed installation of video surveillance system is to enable surveillance of live pictures and digital files of recorded material.

The system is envisaged for undisturbed operation even in case of power outage or any other breakdown in the facility.

The system has been organized so that recording and monitoring equipment is situated in the gate building. The equipment necessary for recording of the video material is located in the technical room, monitors and PC server are located in the control room. The control room where surveillance monitors are located envisages presence of trained staff, and access to the room is permitted only to authorized staff.

The Camera types envisaged are Fixed or Movable (speed dome) in order to cover the whole area at minimum cost.

Cameras are to be mounted eighter on the lighting poles, or dedicated poles for system according to the design. The cameras are to be mounted in housings with cable inlet so that they cannot be seen from the outside.

9.3. Fibre-optic cables

All cables are to be laid in pipes in the trench. Trenches, pits and cabinets are to be implemented according to the specifications of the series H. Pipes are laid along the entire route, as well as to distribution cabinets where cables end at terminal fiber-optic boxes.

9.3.1. Specification of fibre-optic cable

For the construction of the fibre-optic cable network in the terminal, the following cables shall be supplied and implemented:

- Universal fibre-optic loose tube cable, for indoor/outdoor installation, with 24 multi-mode OM2 fibres, 50/125um, rodent protected (by coating without metal elements), with envelope without halogen elements (LS0H-FRNC),
- Universal fibre-optic loose tube cable, for indoor/outdoor installation, with 16 multi-mode OM2 fibres, 50/125um, rodent protected (by coating without metal elements), with envelope without halogen elements (LS0H-FRNC),
- Universal fibre-optic loose tube cable, for indoor/outdoor installation, with 4 multi-mode OM2 fibres, 50/125um, rodent protected (by coating without metal elements), with envelope without halogen elements (LS0H-FRNC)

9.3.2. Equipment and installation materials

The works include the supply, delivery, handling and implementation of secondary parts for the fibre optic cable network.

For the installation of the fibre-optical cables, the following parts are requested:

- Fibre-optic couplers for extension of 24 optical fibres
- Fibre optic coupler support for 24 optical fibres

- Terminal fibre optic box ZOK-4, fully equipped, for 4 fibres (up to 8x SC/ST/LC), with splice box, to be mounted in the polyester distribution cabinet.
- SC/SC multimode duplex fibre adaptor, for cameras at gates and for movable cameras along the terminal
- SC/SC multimode duplex fibre adaptor, for cameras at gates and for movable cameras along the terminal
- Splice protector 6cm- thermal collecting tube for fixing of fibre optic cable joint at splicing
- Fibre duplex patch SC-LC 2m, multimode 50/125
- TP-Link MC100CM Fast Ethernet 10/100Mb/s Fibre multimode converter ranges up to 2km (SC)
- TP-Link TL-MC1400 chassis with 14 hot-swap slots for fibre converters 19"/2U, overvoltage protection for converters, 2 internal fan coils, accepts any combination of converters, optional redundant supply
- Cantilever for fibre optic cable
- Numbers for marking of cable
- Small parts and equipment for fixing and placing as required.

9.3.3. Cable ducts

The works include supply, delivery, handling and laying in the trench of the following pipes with all accessories and couplers, according to the specifications of Series H:

- back-up PVC pipe O110, closed with rubber caps at both ends
- PE pipe O40, envisaged for blowing in of fibre optic cables.

All pipes shall be marked CE, and submitted for approval to the Engineer prior to supply and implementation.

9.3.4. Laying

The laying of the fibre-optical cables shall consist in the leading of fibre-optic cables into the pipes laid in the cable duct and trenches, for the following cables:

- fibre optic cable of capacity 24 fibres. Average route length between two manholes is 150m.
- fibre optic cable of capacity 16 fibres. The cable ends at polyester distribution cabinet, at terminal fibre optic box.
- fibre optic cable of capacity 4 fibres. The cable ends at polyester distribution cabinet, at terminal fibre optic box.

After the leading, the works require forming of back-up at fibre optic cable in the pit, with installation of the cantilever and numeration of the fibre optic cables by pits and facilities.

9.3.5. Finishing works

The following finishing works shall be carried out:

- Execution of forked extension on fibre optic cable (without excavation of expansion and forming of cable) of capacity - 24 fibres
- Execution of straight extension on fibre optic cable (without excavation of expansion and forming of cable) of capacity - 24 fibres
- Mounting of terminal fibre optic box for 4 optic fibres, ZOK-4
- Mounting of TP-Link TL-MC1400 chassis with 14 hot-swap slots.
- Forming of back-up and execution of termination on fibre optic cable in front of optic divider or terminal fibre optic box - by fibre optic tube, cable processing
- Termination of fibre optic cable at terminal fibre optic box - by optical fibre

9.3.6. Final electrical tests

During construction and before going into the next stage of work, as well as before the final hand-over testing, the Contractor shall carry out the following measurements:

- Electrical measurements on fibre optic cable of capacity 24 fibres prior to laying
- Electrical measurements on fibre optic cable of capacity 24 fibres after laying
- Electrical measurements on fibre optic cable of capacity 4 fibres prior to laying
- Final electrical measurements on fibre optic cable of capacity 4 fibres after laying
- Electrical measurements on fibre optic cable during execution of extension of capacity 4 fibres
- Electrical measurements on fibre optic cable of capacity 16 fibres prior to laying
- Electrical measurements on fibre optic cable of capacity 16 fibres after laying
- Final electrical measurements on fibre optic cable of capacity 16 fibres after laying
- Final electrical measurements on fibre optic cable of capacity 24 fibres

9.4. Outdoor cameras

9.4.1. Digital camera

The camera should work in black/white for daytime color mode and high sensitivity at night. It should be able to work synchronously with all cameras in the system.

- The signal type of the system cameras to be installed will be in PAL standard.
- The cameras to be used will be 1/3" digital color CCD and the number of picture elements will be at least 752x582 pixels. Scanning at 15,625 Hz in horizontal. and area scan 50 Hz. will be.

- The synchronization system must be internal / line lock.
- The resolution shall not be less than 480 TVL horizontally.
- Signal or better will be in good faith.
- The cameras will have AWB, AGC, BLC features and no geometric distortion. (It will be examined in the product.)
- At least 16 characters of the camera name should be written.
- For lenses to be attached to cameras, the lens mount shall be suitable for the C or CS mount. Lens control will be DC drive or video drive.
- Camera sensitivity will be at least 0.4lux in color mode and 0.02lux in black and white mode. In addition, due to the SPL (Super Low Light) feature, it should go down to 1/30 sec when the Super Low Shutter feature is turned on and 0.003 lux when the lux feature is on and with the low curtain feature.
- It will prevent illuminated in night view.
- Offers with suitable protection box with external temperature and fan.

9.4.2. Dome camera

- The signal type of color dome shaped cameras to be used in the system to be installed will be in PAL standard.
- The cameras to be used will be 1/4" digital CCDs and the total number of picture elements will not be less than 752x582 pixels.
- The scanning frequency is at least 15.625 Hz horizontally. and the field scan frequency is 50 Hz. will be.
- The synchronization system will be internal and line lock.
- The resolution value shall not be less than 470 TVL horizontally.
- Signal to noise ratio will be 48 dB or better.
- The minimum visual sensitivity is 0.1 lux in B/W mode and 0.01 lux in color DSS mode. will be.
- Cameras will have ATW, BLC features and no geometric distortion.
- Video signal output of the cameras to be used will be 1.0 Vp-p (75 ohm, Composite).
- It will have the capacity to move 360 degrees horizontally.
- Pan speed should be at least 360 degrees/second, tilt speed should be at least 90 degrees/second
- Must be able to navigate at least 128 programmable addresses
- Must have at least 22X optical zoom, digital zoom must be at least X8
- It should have continuous autofocus.

- The control unit will be able to control at least 256 cameras
- It will be able to scan at 128 preset points
- It will be suitable for RS-485/RS-232 system

9.4.3. Facial recognition camera

- All applications should be designed to run on x64 and x86.
- Face Recognition System database SQL Server Database must be defined.
- Face Recognition System will be able to work in harmony with the old version and current display systems versions. (Windows XP, Windows 7, Windows 8.1, Windows 10 etc.)
- Face Recognition software, all identification and reporting screens should be web-based. Web-based software should broadcast from the desired port and be used by authorized users over the network or the internet.
- Face Recognition software face recognition reading system will be a desktop application and each application will have maximum 8 camera support.
- The Face Recognition software should display the last seen face information in the photograph area under the camera image where the face is seen, and list the list of the seen face in a list on the right or left side of the screen, with the camera name and transition date hour second information. This screen should also be able to be displayed as a flat list without photos.
- Every face seen in the Face Recognition software should be displayed in real time on the instant tracking screen in the web interface, and there should be a list of all the people who have passed through during the day under this screen.
- Face Recognition software should have the ability to import personnel information from the standard excel environment.
- Personnel information should be able to be transferred to Word, pdf, excel, txt, xml and html environment.
- Software Specifications
- Face Recognition Software must detect people passing by the camera's line of sight.
- Face Recognition System will be given as a whole, together with all its elements (HD Resolution IP Camera - Mega Pixel Lens, Power LED Infrared Projector - Housing - Mounting Tools, etc.).
- Face Recognition Software must be licensed per camera. License information should be easily visible from the software interface.
- Face Recognition Software will be developed by domestic companies. All support must be provided from Turkey.
- The face recognition camera will have a resolution of at least 1.3 mega pixels. Cameras should work in color when there is sufficient light during the day, and in black and white at night.

- Face Recognition Software should process each camera image in real time (25 frames/sec PAL) and display it in real time (25 frames/sec PAL) while processing on the screen.
- Face Recognition Software must provide at least 98% or more accurate reading success.
- Face Recognition Software should not treat two consecutive people as one tool.
- Face Recognition Software should take a wide-angle photo for each person detected.
- Face Recognition Software will run at resolutions in the HD range of at least 720p.
- Face Recognition Software should provide the possibility to select the camera from which the image will be taken.
- Face Recognition Software will be able to work in Client – Server architecture.
- Face Recognition Software will generate an audible and visual alarm for the "black list (banned)" registered to the system.
- Barrier triggering should be done with an I/O device connected from the RS232 port of the computer.
- Face Recognition Software should not be dependent on a single brand of camera. It should be compatible with multiple brands of cameras. These camera brands will exist in the software menu in a multiple-choice manner.
- Face Recognition Software will be able to receive images from IP cameras' H264, MJPEG, JPEG, MPEG4 protocols. It will be able to take images from all ONVIF supported cameras. The user will be able to take an image by typing the ONVIF URL address of the camera he/she wants to use.
- There will be no need to install Ram Disk during the installation of the Face Recognition Software. Systems that require a Ram Disk will not be accepted.
- All data and images recorded in the database by the Face Recognition Software must optionally be encrypted and watermarked.
- Face Recognition Software will be able to send information to the LED Graphic Display over TCP-IP or RS232 interfaces.
- The average face recognition performance of the Face Recognition Software including different lighting conditions (night, day, night-day transitions) and different weather conditions (fog, rain, snow, etc.) must be at least 80%.
- The Face Recognition System will be excluded from the license plate recognition success rate assessment in the following cases: hats, scarves, glasses, masks, etc. closure of a part of the face for reasons or changes in character appearances.
- Face Recognition Software should be able to work again in power cuts without requiring resets.
- Facial Recognition Software must be logged in with a user name and password, and the license plate recognition system database must be accessed by an operator defined with an authorized registration number and password.

- All settings and configurations of the Face Recognition System should be made easily with the menus on the software web interface.
- There will be a "Help" menu on the Face Recognition Software. In this menu, there should be an illustrated user guide of the software, software version and license information.
- There will be an "Emergency" button on the Face Recognition Software. This button will keep the barrier and/or doors open in a possible emergency (earthquake, fire, flood, terror, etc.). Vehicles that pass in the time period in which this situation occurs will be able to be reported separately.
- The Web Software will have an advanced reporting screen. Plate recognition pictures and information will be displayed on this screen by filtering according to the determined criteria.

Camera – Lens Specifications

- The sensor of the camera should have a 1/3" internal progressive scan CMOS sensor.
- The resolution value of the camera should be at least HD 1.3 MP 1280(H) x 960(V).
- The light lux value of the IP camera should be F1.2@0.5lux Color – F1.2@0.01ux B&W Black and white.
- The camera must have a RISC Processor CPU.
- The camera must have Flash ROM and RAM.
- The camera must support professional DC-AVF MP IR lenses.
- Camera must have at least 5-50mm DC-VF MP lens.
- The camera must support H.264 Multiple Stream multiple video streams.
- The camera should stream real-time fps/bit rate video in all resolutions.
- The Camera must have a mechanical ICR filter.
- Camera mechanical ICR filter Night and day mode transitions should be automatic and adjustable.
- The WDR signal rate of the camera should be +- 100dB.
- The camera must have external and high-definition BNC video output.
- The pixel resolution values of the camera should be selectable between 720P/D1/CIF.
- The camera must be connected to the network with Ethernet standard (RJ-45) sockets.
- The camera must have isolated RS-485 and I/O Alarm inputs.
- Camera HTTP, TCP/ IP, UDP, SMTP, PPOE, FTP, DHCP, DDNS, NTP, UPNP, RTSP/RTP, RTCP, ONVIF etc. should support.
- The camera must support the ONVIF "Open Network Video Interface Forum" Standards (protocol) and must be one of the models of Full Member ONVIF member manufacturers that comply with the technical specification.
- IP camera video image streams and network band capacity should be adjustable.

- IP camera Constrained and Variable, (CBR/VBR) capacity flow – video control feature should be adjustable with selectable values.
- The camera must support Micro SD/TF card recording.
- Micro card recording support of the IP camera should be able to work depending on the date time range.
- Network users should watch the live and recorded images of the IP camera simultaneously with the support of date time scale.
- Camera should be able to get date and time information via server (NTP) with options.
- It should have the feature of adding location and zone identifying name text on Camera images.
- The settings of the camera such as image light gain, light compensation, luminance evaluation, noise reduction, white balance, light contrast, sharpness, brightness, image rotation, image saturation and color editing should be adjustable and selectable with values. (WDR, AGC, BLC,2D,3D, Brightness, Shutter, Gain, Sharpness, Gamma, Aperture, Colors, Contrast, Hue, Saturation)
- The audio line of the camera should have audio input and provide bidirectional audio transmission.
- The camera should support remote monitoring with products such as Mobile iPhone.
- The camera should support snapshot frame picture photo capture feature.
- The camera should have sensor supported alarm detection and management feature.
- The IP camera must have the sensitivity zone defined motion detection Video Motion Dedection feature.
- The motion detection alarm management of the camera should be operable depending on the date time range.
- Camera must have password protected user addition and identification.
- The defined system and setting options of the camera must be backed up.
- Camera must have image masking feature with custom field definition.
- The camera must have update transfer (Firmware) feature over the network.
- The camera should be able to work with 12 Volt power supply and 802.3af PoE support.
- The camera must have a CE certificate and must be presented with a certificate of authorization from the distributor.
- It should come with a lens that supports Mega Pixel resolution with a focal length of 5 – 50mm on the camera.
- The lens on the camera should be sensitive to the infrared projector (Day/Night feature) in order to capture clear exposures with the reflective feature of the license plates at night and infrared projector illumination.

- The lens on the camera must be automatic DC Drive, zoom and focus settings must be made manually.
- The camera housing should be heated, fan, thermostated. The cables coming to the camera must be able to pass through the housing foot. The enclosure must be made of polycarbonate material that is resistant to impacts and is not affected by corrosion.

9.4.4. Secondary equipment

Ancillary equipment to be installed with the cameras include at least the following:

- housing for outdoor mounting, side opening, compact elegant design, standards IP66/EN61000-6-3, EN60950, EN50130-4, with working temperature -20~+60Co,
- support for mounting onto wall with hidden cabling, 24Vac (optional 220Vac)
- Outdoor iron pole, 7m high, for mounting of the camera where the position of the camera does not fit with the position of the lighting poles. The poles are equipped with:
- iron cover on pole opening
- foundation plate with pipe for condensate drainage
- earthing bolt
- anchor plate with anchor bolts cast into the concrete foundation
- SFTP cable Cat. 6, for connecting to the cable installation
- FTP Patch cord Cat. 6 for connecting to the cable installation
- Other small consumables, as required for implementation of the system
- User and maintenance manuals

9.4.5. Quality control

The Contractor shall carry out electrical tests of the individual parts of the system, and final acceptance tests of the whole integrated system before putting it into operation.

All test results shall be submitted to the Engineer for acceptance.

9.5. Card system on gates

The present specifications relate to the outdoor elements of the system, the supervision part being located in the gate building and developed as part of buildings.

9.5.1. Input distributor of parking cards cd-b

The works include supply, delivery, handling, installation and connection to cable installation, programming and start-up of the distributor of parking tickets, with the following minimum specifications:

- Issuance of "barcode" parking cards
- RF reader of contactless parking cards
- Display 4x20 characters with background illumination
- Intercom
- Vehicle presence detector
- Possibility to work in "off line" regime

9.5.2. Output reader of parking cards cr-b

The works include supply, delivery, handling, installation and connection to cable installation, programming and start-up of the distributor of parking tickets, with the following minimum specifications:

- Issuance of "barcode" parking cards
- RF reader of contactless parking cards
- Display 4x20 characters with background illumination
- Intercom
- Vehicle presence detector
- Possibility to work in "off line" regime

9.5.3. Gate with straight boom opening from both sides

The works include supply, delivery, handling, installation on its foundations and connection to cable installation of the access gate to the terminal zone, according to the Contractor's drawings.

The maximum boom length shall be 3m.

The booms shall have active protection against striking into obstacle.

9.5.4. Other parts

This item provides for the ancillary parts of the installation of card-system at the gate, to be supplied installed and connected

- System for validation of RF contactless cards
- Intercom - set (5)
- Material for preparation of inductive loop
- TP-Link MC100CM Fast Ethernet 10/100Mb/s Fibre multimode converter range of up to 2km (SC)
- SFTP cable cat. 6
- Other contingencies and consumables

- User and maintenance manuals

9.5.5. Quality control

The Contractor shall carry out electrical tests of the individual parts of the system, and final acceptance tests of the whole integrated system before putting it into operation.

All test results shall be submitted to the Engineer for acceptance.

9.6. Quality control and acceptance of the works

Prior to the official technical acceptance, the Contractor will carry out a full examination of the entire executed installation, eliminate possible functional and aesthetic defects, and put the installation into trial run.

The Contractor will hand over to the Engineer the protocol for the trial runs and tests.

Upon completion of works, prior to technical acceptance of the facility, an authorized institution shall be contacted by the Contractor and shall perform necessary testing and measurement of installations in line with the technical regulations governing this field. The results of the testing should be advised to the Engineer in the adequate public documents.

10. LANDSCAPING AND FENCES

10.1. Landscaping

10.1.1. General

The work includes preparation land for planting, supply of shrubs, grass seeds and humus, loading, transport, unloading planting and the one-year plant-survival guarantee.

10.1.2. Supply and transport

The plants shall be as specified in the Contractor's design. The landscaping design shall at least present the same esthetic and landscaping effects as those proposed in the preliminary design as reference solution.

The following plants species (or similar) are proposed:

- Acer Negundo (Boxelder Maple)
- Acer palmatum "Atropurureum" (Japanese Maple)
- Albizzia julibrissin (Silk Tree)
- Betula pendula (Birch Tree)
- Catalpa bignonoides (Southern Catalpa)
- Fraxinus excelsior (Fraxinus excelsior)
- Ginkgo biloba (Maidenhair Tree)
- Ligustrum japonica (Japanese Privet)
- Liquidambar styraciflua (Sweet Gum)
- Liriodendron tulipifera (Tulip Tree)
- Magnolia grandiflora (Evergreen Magnolia)
- Platanus orientalis (Oriental Plane)
- Tilia tomentosa (Silver Linden)
- Abies bornmülleriana (Nordmann Fir)
- Cedrus atlantica "Glauca" (Atlas Cedar)
- Cupressus arizonica "Glauca" (Arizona Cypress)
- Seed mixtures for meadow lawn.

The selection process shall be related to the selection of plants that are not psychopathological and entomological infected, which are real, vital and healthy, with developed roots (in proportion with the crown), etc.

Transportation shall be smooth and effective, because of the trees that are outside the soil exposed to different influences that are usual negative, and because the soil (pits) is prepared.

10.1.3. Laying

After completion of all construction works, soil shall be cleaned of debris, lime, stones, bricks and other impurities. If soil has a poor quality, it is necessary to improve by bringing the better material (humus) from the side and replace it.

When soil is set and roughly aligned, there shall be a surface way of treatment - harrowing, and parts which are not plowed or set. During the cultivation process blown Manure shall be add, and then soil harrowing or chopping in small pieces (mechanically or manually).

Fertilization treatment of the soil should be done in autumn, because leafs are frosty during the winter and then during the spring to do the planting. If this is not possible, it is desirable that treatment shall be done at least 7-10 days before the planting.

10.1.4. Quality control

The Engineer shall visually inspect the works to assess the correct area and species have been treated, and that the plants are correctly planted to ensure their growth.

After the first winter, the Contractor shall in relation with the Engineer make an inspection of all plants, and shall replace all dead plants.

10.2. Fences and gates

The work includes supply, loading, transport, unloading, storage, installation with supply of all secondary parts required and interconnections (liaison) of fences and gates.

The basic chain link fence made of galvanized (standard NEN-EN-ISO 1461) steel posts, placed vertically into the ground, shall be used for fencing of the IMT and its belonging infrastructure.

Chain link fence could be made from stainless steel wire or PVC coated iron wire (rhombic wire mesh, chain link fencing mesh).

10.2.1. Fence around the terminal

The Contractor shall propose the envisaged gates to the Engineer for his approval.

Installation of gates shall be conforming to EN 12635.

Applicable Standards

- EN 10223-4: Steel wire and wire products for fences. Part 4. Steel wire welded mesh fencing
- EN 10223-6: Steel wire and wire products for fences. Steel wire chain link fencing
- EN 10244-: Steel wire and wire products. Non-ferrous metallic coatings on steel wire. General principles

- EN 10244-2: Steel wire and wire products. Non-ferrous metallic coatings on steel wire. Zinc or zinc alloy coatings
- EN 10245-2: Steel wire and wire products. Organic coatings on steel wire. PVC finished wire
- EN 10305-5:2010: Steel tubes for precision applications. Technical delivery conditions. Welded and cold sized square and rectangular tubes
- EN 10326:2004: Continuously hot-dip coated strip and sheet of structural steels. Technical delivery conditions.

10.2.2. Gates of the terminal

Applicable Standards

- EN 13241-1:2003+A1:2011: Industrial, commercial and garage doors and gates. Product standard. Products without fire resistance or smoke control characteristics
- EN 12635: Industrial, commercial and garage doors and gates.

The Contractor shall propose the envisaged gates to the Engineer for approval.

Installation of gates shall be conforming to EN 12635.

11. WATER SUPPLY AND FIRE PROTECTION

11.1. Earthworks and concrete works for water supply and fire protection

Earthworks include procurement, transport, handling, placing, compaction and finishing of all excavated and contractors' materials on site.

11.1.1. Earthworks for the water main

Earthworks for the outside water supply consist in the following:

- Mechanical and manual excavation of trenches in the material category II, for main water supply pipes. Excavation is from designed elevations of road base. Excavation is mechanical and only where it is not possible, manual. Excavated material shall be removed at least 1 m from the edge of the trenches. The trench should be shored and eventually pumped.
- Additional manual excavation for fire hydrants in material of category II.
- Planning of the trench bottom to the projected levelling with accuracy of ± 2 cm.
- Procurement, transport and installation of sand over the entire width of the trench, around the pipe and above the pipe d = 10 cm in layers with compaction.
- Backfilling of the trench to projected road sub-grade elevations with gravel.

11.1.2. Earthworks for the water meter manhole

Earthworks for the water meter manhole and connections consist in the following:

- Mechanical and manual excavation of trenches in the material category II, for main water supply pipes. Excavation is from designed elevations of road base. Excavation is mechanical and only where it is not possible, manual. Excavated material shall be removed at least 1 m from the edge of the trenches. The trench should be shored and eventually pumped.
- Backfilling of the excavations to projected road sub-grade elevations with gravel.
- Placing of a drainage layer of natural gravel mixture, below the bottom slab of the manhole, in the layer d = 10 cm, with compacting.
- Mechanical excavation of trenches in the material category II for the connecting pipes. Trench width 0.8 m, and depth according to the longitudinal cross sections. Excavated material removed at least 1 m from the edge of a trench. The bottom of the trench must be excavated to ± 3 cm of the designed levels.
- Planning of the trench bottom to the projected levelling with accuracy of ± 2 cm.
- Procurement, transport and installation of sand over the entire width of the trench, around the pipe and above the pipe d = 10 cm in layers with compaction.
- Backfilling of the trench to projected road sub-grade elevations with gravel.

11.1.3. Earthworks for the outside water network

Earthworks for the outside water network consist in the following:

- Mechanical and manual excavation of trenches in the material category II, for outside water network. Excavation is from designed elevations of road base. Excavation is mechanical and where it is not possible, manual. Excavated material removed at least 1 m from the edge of a trench and if it is not possible than remove entire excavated material. The trench should be shored and pumping of underground water during the works could be required.
- Planning of the trench bottom to the projected leveling with accuracy of c 2 cm.
- Procurement, transport and installation of sand over the entire width of the trench, around the pipe and above the pipe d = 10 cm in layers with compaction.
- Backfilling of the trench to projected road sub-grade elevations with gravel.

11.1.4. Earthworks for the fire water reservoir and outside drainage

Earthworks for the fire water reservoir consist in the following:

- Backfilling-covering the reservoir, from level 45,20 to level 55,40 with excavated material from temporary landfill. (Backfilling up to level 45,20 is included in embankment construction of the terminal.)
- Procurement, transport and placing of a drainage layer of natural gravel mixture, below the bottom slab of the reservoir and mechanical room, in the layer d = 20 cm, with compacting.
- Procurement, transport and placing of a drainage layer of natural gravel mixture, below the bottom of the entrance slab, in the layer d = 10 cm, with compacting.
- Mechanical excavation of trenches in the material category II for laying of sewerage and drainage pipes. Trench width 0.8 m, and depth according to the project. Excavated soil deposited at a distance 1.00 m from edge of the trench. The bottom of the trench must be executed according to the projected levels ± 3 cm.
- Planning of the trench bottom to the projected leveling with accuracy of ±2 cm.
- Backfilling of the excavation with the excavated material in layers of 20-30cm. During compaction the Contractor shall take the necessary measures not to damage the pipes.
- Procurement, transport and installation of sand over the entire width of the trench, around the pipe and above the pipe d = 10 cm in layers with compaction to a thickness of 45 cm above the pipe.

11.1.5. Earthworks for the outside fire hydrant network

- Mechanical and manual excavation of trenches in the material category II, for laying the fire protection pipeline. Excavation is from designed elevations of road base. Excavation is mechanical and where it is not possible, manual. Excavated material removed at least 1 m from the edge of a

trench and if it is not possible than remove entire excavated material. The trench should be shored. Shoring of the trench and pumping water not included.

- Additional manual excavation for fire hydrants in material of category II.
- Planning of the trench bottom to the projected leveling with accuracy of ± 2 cm.
- Procurement, transport and installation of sand over the entire width of the trench, around the pipe and above the pipe d = 10 cm in layers with compaction.
- Backfilling of the trench to projected road sub-grade elevations with gravel.

11.1.6. Concrete works for water supply

Concrete works include:

- The Construction of anchor blocks of unreinforced concrete MB20. In places of unrestrained hydrants and horizontal and vertical bends of the pipe alignment.

11.1.7. Concrete works for the water meter

Concrete works include:

- Concreting of the leveling layer d = 5 cm below the lower manhole slab, with concrete MB 10, according to specifications Series
- Concreting the base slab of the manhole, d = 20 cm, with reinforced concrete MB 30, according to specifications Series
- Concreting of the walls of the manhole, d = 20 cm, with reinforced concrete MB 30, according to specifications Serie
- Concreting the top slab of the manhole, d = 20 cm, with reinforced concrete MB 30, according to specifications Series

11.1.8. Concrete works for the fire water reservoir

Concrete and structural works include:

- Building a insulation protection on vertical reservoir walls, with full brick (1 / 2 bricks) in cement mortar, according to specifications Series
- Concreting leveling layer d = 5 cm below the lower slab, with concrete MB 10, according to specifications Series
- Concreting leveling layer d = 5 cm as insulation protection, with concrete MB 10, according to specifications Series
- Concreting entrance slab d = 10 cm, with concrete MB 20, according to specifications Series
- Concreting the base slab of the reservoir (d=30cm), and equipment room (d=25cm), with reinforced concrete C30/37, according to specifications Series

- Concreting the walls of the reservoir (d=30cm), and equipment room (d=25cm), with reinforced concrete C30/37, according to specifications
- Concreting the top slab of the reservoir and equipment room (d=20cm), with reinforced concrete C30/37, according to specifications
- Concreting the roof rim (d=20cm), with reinforced concrete C30/37, according to specifications.

11.1.9. Concrete works for the reservoir outside works and drainage

Concrete works include:

- Concreting the base slab of the manhole, d = 20 cm, with reinforced concrete MB 20, according to specifications.
- Concreting the base of manhole with concrete MB 20, according to specifications.
- Concreting the top ring of 10 cm of manholes, with reinforced concrete MB 30, with necessary reinforcement, according to specifications Series. The ring is made around the frame of cast iron cover.

11.1.10. Concrete works for the fire hydrant outside network

Concrete works include:

- Construction of anchor blocks of concrete MB20 in places of unrestrained hydrants and horizontal and vertical bends of the pipe alignment, according to specifications

11.2. Cast iron water pipes

The work includes procurement, transport, unloading, distribution along the trench, lowering into the trench, the horizontal alignment and vertical directions, jointing and installation of Cast Iron water pipes ductile cast iron PN10, Class 40 of EN 545:2002.

11.2.1. Applicable standards

The Contractor shall carry out the works described in accordance with the relevant standards or equivalent local or international standards. The main standards are, but shall not be limited by the following:

- DIN 2950 Malleable cast iron pipe fittings
- DIN 28601 Pipes and fittings made of ductile cast iron with threaded sleeve joints
- DIN 28603 Pipes and fittings made of ductile cast iron with tension proved sockets joints
- EN 545 Pipes, fittings and accessories made of ductile cast iron for water pipes, requirements and test procedures
- EN 598 Pipes, fittings and accessories made of ductile cast iron for wastewater pipes, requirements and test procedures

- ISO 2531 Ductile iron pipes, fittings, accessories for pressure pipelines
- ISO 6594 Cast iron drainage pipes and fittings -- Spigot series
- EN 10204 Inspection documents supplied to the buyer for the delivery of iron and steel products

11.2.2. Transport and storage

During transport pipes shall be solidly supported not only under the lower layer and between the layers, but also laterally and at the ends and the top in wooden crates to prevent accidental damage. Storage on site shall be on a raised floor with support frames so that the sockets do not touch the ground. Storage can be either head to tail storage or all pipes pointing in the same direction. The storage of all pipes shall be carried out in strict accordance with the manufacturer's instructions.

11.2.3. Installation

All buried pipes shall, unless otherwise indicated, be of the socket and spigot type with coatings. The joint to be used shall be the automatic standard joint. This joint is used to connect two pipes, which terminate respectively in a socket and a spigot. The joint is made watertight by the compression of a rubber gasket.

Laying of pipes shall generally be in accordance with the requirement as specified in DIN EN 1610, in these Technical Requirements and with the instruction of the manufacturer.

The pipes shall be laid in straight lines both in horizontal and vertical planes. Changes of direction of less than 11.25° shall be obtained by deviating the pipes after jointing at one or more joints. The angle of deviation at each joint depends on the ND and has the following maximum values:

Nominal Diameter ND [mm]	**Maximum Deviation**
100 to 150	5
200 to 300	4
350 to 500	3
600 to 700	2
800 to 1100	1-30

No deviation can be made at a locked joint.

The general jointing procedure may vary with the type of joint used, but the basic requirements are:

- Overall cleanliness
- Correct positioning of the components
- Correct centering of the spigot in the socket
- Strict observance of the manufacturer's assembling instructions

At changes in direction (bends) or nominal diameter (reducers) and when branching (tees) is constructed or at pipeline ends (blank flanges) joints shall provide restraint if the pipe is not secured.

Pipes for water supply shall be lined internally with spun cement mortar. The mortar shall contain no toxic element or elements soluble in water, neither shall it contain elements susceptible to impart any smell or odors to the water. The characteristics of the mortar, its placing and control shall be in compliance with DIN2880 and DIN EN10928. The mortar shall consist of at least one part of cement by weight to 3.5 parts of sand by weight, i.e. a sand / cement ratio smaller than or equal to 3.5. The water cement ratio shall not exceed 0.42 and the quality control shall be performed in accordance with ISO6600.

All pipes of ND 250 or smaller shall have an external electrolytic zinc protection. In addition, all pipes shall have an external coat of black varnish applied at the factory in accordance to DIN30674-3.

The pipes shall be positioned and bedded in the trenches on the compacted bedding layer and jointed in an approved manner. The jointing of all pipes shall be carried out in strict accordance with the manufacturer's instructions. All joint holes have to remain uncovered until passing the prescribed pressure test.

11.3. HDPE water pipes

The work includes procurement, transport, unloading, distribution along the trench, lowering into the trench, the horizontal alignment and vertical directions, jointing and installation of HDPE water pipes.

11.3.1. Applicable standards

High Density Polyethylene (HDPE) Pipes and fittings pipes shall comply with listed standards or equivalent harmonized European Standards.

- DIN 8074 PE HD pressure pipes, dimensions
- DIN 8075 PE HD pressure pipes, dimensions
- DIN 19533: PE HD/LD pressure pipes for water supply, requirements
- DIN 19537: PE HD/LD non-pressure pipes and fittings
- DIN 16963: PE HD fittings
- EN 1519: PE HD/LD plastics piping systems for soil and waste discharge (low and high temperature) within the building structure
- EN 1555: PE HD/LD Gas pipe systems
- EN 12201: PE HD/LD non-pressure pipes for water supply
- EN 12318: PE-X plastics piping systems for hot and cold water
- EN 12666: PE HD/LD non-pressure pipes for wastewater
- EN 13244: PE HD/LD pressure pipes

11.3.2. Supply

The pipes shall be manufactured from high-density polyethylene containing only those antioxidants, UV stabilizers and pigments necessary for the manufacture of potable water black pipes. The Contractor shall provide an approved third-party certificate to verify the above.

The pipes shall be designed for a nominal working pressure class PN 16, have a hydrostatic design stress of 50 kg/cm2 at 20 °C and be jointed with push fit couplings. The couplings and fittings shall be designed for a nominal working pressure of 16 bars and a temperature of 40°C and shall fit the HDPE pipes in this contract.

For the outside water network, pipes shall be HDPE pipes PN10, Class S-5 (SDR-11), dimensions

D40 mm, and D32 mm, installed according to the Contractor's drawings.

For the fire hydrant network, pipes shall be PEHD water pipes PN10, Class S-5 (SDR-11), dimensions D110 mm and D 90 mm, installed according to the Contractor's drawings.

11.3.3. Installation

The minimum diameter of the rollers for coiled pipe should be such that kinking of the pipe is prevented. The minimum internal diameter of the rollers shall not be less than 24 times the nominal outside diameter of the pipe. The ends of the pipe shall be plugged or covered.

Mechanical couplings and fittings shall be used. The mechanical joints shall be push-on types. They shall be produced in acetal-homo-polymer or be combined with gunmetal adapters. The joints have to provide the system with strength in tension and water tightness. Push fit jointing type shall consist of a PVC grip ring and nitrite elastomers or equivalent O- ring.

The pipes shall be positioned and bedded in the trenches on the compacted bedding layer and jointed in an approved manner. The jointing of all pipes shall be carried out in strict accordance with the manufacturer's instructions. All joint holes have to remain uncovered until passing the prescribed pressure test.

11.4. Steel water pipes

The works include procurement, transport, handling and installation of steel water pipes.

11.4.1. Applicable standards

Works shall be realized in accordance with applicable Turkish and EU standards.

Steel Pipes

- DIN 1626 Welded steel pipes for special requirements
- DIN 1629 Seamless steel pipes for special requirements
- DIN 2440 Seamless threaded normal-walled steel pipes
- DIN 2441 Seamless threaded thick-walled steel pipes
- DIN 2448 Seamless normal-walled steel pipes

- DIN 2460 Steel pipes for water pipelines with cement lining ex-factory
- DIN 2461 Steel pipes for water pipelines with bitumen lining and coating ex-factory
- DIN 19630 Pipe laying regulations for natural gas- and water pipe networks
- EN 10226 Pipe threads where pressure tight joints are made on the threads

Fittings

- DIN 2615-19 Butt welding fittings
- DIN 2981-83 Threaded steel pipe fittings
- DIN 2986-88 Threaded steel pipe fittings
- DIN 2990+91 Threaded steel pipe fittings
- EN 10253 Welding pipe fittings
- DIN EN 12041 Threaded steel pipe fittings Steel Names and QC standards
- DIN EN 10027 Steel names and numbers
- DIN EN 10204 Inspection documents supplied to the buyer for the delivery of iron and steel products

Material Tests

- DIN EN 10002 Metallic materials; Tensile test
- DIN EN 10003 Metallic materials; Brinell hardness test
- DIN EN 10004/10109 Metallic materials; Rockwell hardness test
- DIN EN 10232-10237 Metallic materials; tube test

Corrosion protection

- DIN EN-ISO 12944-Parts 1-8: Corrosion Protection of Steel
- DIN 2614 Cement mortar inside lining for ductile cast iron and steel pipes and fittings, requirements
- DIN 2880 Cement mortar inside lining for ductile cast iron and steel pipes and fittings, application
- DIN 30670 Wrapping of steel pipes, PE
- DIN 30675 Outer corrosion protections of buried pipes, steel pipes
- DIN EN 10286 Steel tubes and fittings for on and offshore pipelines - External three-layer extruded polypropylene-based coatings
- EN 10287 Steel tubes and fittings for on and offshore pipelines - External fused polyethylene-based coatings

- EN 10288 Steel tubes and fittings for on and offshore pipelines - External two-layer extruded polyethylene-based coatings
- EN 10928 Cement mortar inside lining for ductile cast iron and steel pipes and fittings, requirements
- DIN EN 22063 Metallic and other inorganic coatings: thermal spraying: zinc, aluminium and their alloys

11.4.2. Installation

Steel pipe work shall comply with the relevant Standards and all assembling shall be made up from piping to this specification. The type of pipe shall be hot finished seamless steel.

Steel pipe work above 80 mm bore shall be either coated externally and security wrapped where laid underground shall be painted externally when laid above ground or in ducts. In both cases they shall be internally lined at the manufacturer's works with either an approved epoxy based or similar lining of not less than 250 microns in thickness or with concrete lining. The internal lining shall be continuous across joints as far as this is practicable according to the size of pipe.

Steel pipe work below 80 mm bore, excepting that for conveying oil, shall be galvanized.

Individual sectioning of pipe work shall be cut to the correct length and joined with loose flanges. The flange connections shall have welded collars according to DIN 2642 PN 10 with loose flanges, which shall be according to DIN 2642 (or equivalent harmonized European Standards).

Flexible joints shall be bolted gland or detachable flexible coupling as necessary.

11.5. Pipes and fittings

The works include procurement, transport, handling and installation of all pipes and fittings.

This Section sets out the specifications and standards required for the external pipe work and pipe work within structures. The Specifications are to be considered for both civil and mechanical applications.

11.5.1. Supply

All pipe work, valves and fittings shall be to a class in excess of 1.5 times the maximum pressure they will attain in service including any surge pressure, and shall be supplied by a manufacturer approved by the Engineer.

Elements include:

- assembly-disassembly smooth flange MDK O 80
- angle strainer DN80 mm with inox sieve, flanged, PN10, for fire water line.
- strainer DN 32 mm.
- strainer DN 25 mm.
- cast iron fittings O 100, 80 and 50 mm with flanges for working pressure 10bar.

- Ventilation shaft for fire water reservoir, made of steel pipes DN150 with a covering cap.
- cast iron fittings NP 10 bar for the fire hydrant network
  - T 100/100
  - T 100/80
  - T 100/50
  - FF O 80; L=1000
  - NO 80

11.5.2. Installation

The pipe work installation shall be arranged to offer ease of dismantling and removal of pumps or other major items of equipment.

Flange adaptor or detachable couplings shall be included in the connecting pipe work of all items of Works to facilitate dismantling and provision shall be made for flexible joint arrangements adjacent to all structures. Adaptors on pump delivery branches shall be upstream of their respective reflux valves.

The ends of pipes for use with flange adaptors and couplings shall be faced squared and sized to the tolerances required by the manufacturer of the coupling.

All pipe work shall be adequately supported in trenches or with purpose-made fixings in structures and when passing through a wall, shall incorporate a puddle flange or other suitable purpose-made sealing device.

All loose flanges shall be secured to fixed flanges by suitable tie-bolts.

Flange adaptors and unions shall be supplied and fitted in the pipe work runs wherever necessary to permit the simple disconnection of flanges, valves and equipment without the need to spring long runs to remove valves, equipment and the like.

Flexibility shall be provided in the pipe work at joints in the main structures to allow for differential settlement and thermal stresses which shall not be transferred to the anchor blocks. Flexible joints or collars and cut pipes shall also be allowed on all pipe work where necessary to allow for some margin of error in the building work.

The pipe work system shall be so designed to enable the necessary anchorage at blank ends, bends, tees and valves may be kept to a minimum. The Contractor shall indicate on his detailed drawings the blocks required to anchor pipe work supplied by him.

Each force and force moment that may occur in the works may be compensated by an correct possitioning of solid fixations, expansion joints and sliding supports. For liquids, the incorporation of rubber compensator is not permissible. All new air ducts should be made of stainless steel. Buried pipes of stainless steel should be protected against cathodic corrosion.

Pipelines in the open-air delivering sludge or water should be insulated with mineral wool or rigid foam and accompanying heating should be provided for. Protect the insulation with weatherproof aluminum shell.

Pipeline for pump mains should be made of material resisting to chemicals. Removable pipe sections are recommendable at places where assembling and dismantling of the pipeline - due to pipe layout - is not possible in any other way. Pipe manifolds around pumps are required to be in welded steel. Any other pipeline may be stainless steel, galvanized steel, ductile iron or HDPE.

Threaded surfaces (nuts) should receive a coat of corrosion preventing grease and closed with plastic cap, sealing strip and ring clamp. The same holds true for screw joints of stainless steel.

At necessary measuring sites detailed for electric equipment, pipe end welded in of ND 50 mm with flange joint should be built in. Places that are anticipated to be developed into future measuring site should be equipped with gate valve of flange joint of ND 50 mm.

In case of each pipeline (in case of full-section medium delivery), following maximum velocities of flow should be considered:

Streaming medium	**Type of pipeline**	**Flow velocity** (m/s)
Cold water	Suction pipe	0 - 1.0
	Delivery pipe	1 - 2.5
Mix of sand water	Suction pipe	2 - 5.0
	Delivery pipe	
Compressed air	Suction pipe	10 - 16
	Delivery pipe	
Hot air	Suction pipe	0.8 - 1.0
	Delivery pipe	0.8 - 10

11.5.3. Quality certificates

Before starting with construction, certificates as follows should be submitted to the Engineer:

- Pipe layout drawings and isometric drawings with item list;
- Wall thickness calculations, of course, with static calculations of fixing;
- Welding drawing;
- Descriptions on material listing basic and auxiliary materials;
- Certificates of welders;
- Technological examination, if necessary;
- Manufacturer's certificate;
- Certificate attesting the durability (sustained loading) of the given material (for materials in contact with the medium such as pipelines, pipe shapes, sealings, fittings, etc.) in case of given medium, given temperature and given operational pressure;

- Instructions for gluing.

Quality certificates are required for all for materials used.

On the assembly drawings pipelines of < ND 80 should be indicated by one single line, those of > ND 80 by triple line. Isometric drawing should be made of pipelines > ND 50. Any deviation from the foregoing should be fixed in the contract.

11.5.4. Welding

Only welders having adequate certificate should be engaged. Before starting to work, a copy of the welder's certificate should be submitted to the Beneficiary without notice. Welder repeatedly failing in producing the agreed quality of welded joint should be replaced if so, required by the Beneficiary.

In bad weather, additional measures are requested in the course of welding consequently, in case of rainy weather, provision shall be made to keep the places of welding dry. In weather with temperatures below 5 C, a strip of 100 mm should be preheated to 50 C, on both sides of the welded joint in case of both seams and tack welds.

Splash, burning-in, uneven arc, oversized root edges at corner joints, unsatisfactory seam or any crack are impermissible in the course of welding. Surfaces should be free from any marks of impact, indentation and deformation.

11.5.5. Wall passing

Where pipes pass through a concrete wall or structure they shall project from the external face(s) of the structure by 300 mm for pipes with nominal bores of 500 mm or less and 500 mm for pipes with nominal bores in excess of 500 mm and the surface of such pipes shall be prepared to the approval of the Engineer to ensure a satisfactory bond between pipes and concrete.

Wall sleeves for water retaining structures shall be completed watertight. Puddle flanges, wall pieces with flange and/or standard wall sleeves form internationally accepted manufactures would be approved, only.

The first pipe in open ground leaving a structure shall be short length of either spigot and socket or double socket to suit the flow direction. The length of this pipes shall be one and half times the nominal bore or 600 mm whichever is the greater.

11.5.6. Adapters

Adapting pieces shall be provided to all valves, in suction and pressure pipes of pumps and blowers and where necessary to ensure a simple dismantling of the pipe work. They shall be lockable in position.

Adapting pieces shall be flanged according to DIN 2501 and shall comply with the requirements of the DIN 2631, 2632, 2633 or equivalent harmonized European Standards.

The flexible/flange adapters used for jointing the plain ended pipe and bends shall be gasket, sleeve type with diameter to properly fit onto a pipe/flange forming permanently tight joints under all reasonable conditions of expansion, contraction, shifting and settlement in buried or above ground condition.

Flexible couplings shall connect pipes without flanges of the same or different materials.

Flange adapters shall be used for connection of pipes, one with flange and one without flange of the same or different materials.

The couplings and flange adapters shall be of galvanized mild steel or galvanized rolled steel. The sealing shall be of artificial rubber and be resistant against sewage.

11.5.7. Rubber compensators

Rubber compensators shall be provided to all pipe work at the access to machines like blowers, etc.

Rubber compensators shall be capable of balancing thermal expansions, discrepancies of assembling, vibrations of machinery and settlements.

Direction	Diameter	Excursion/value
Axial	up to ND 50 mm	□ + 10 mm
	from ND 65 mm	□ + 20 mm
Lateral	Displacement	□ ± 15 mm
Angular		□ 7.5 °
Compression		□ 30 mm

Rubber compensators shall be flanged according to DIN 2501 and DIN 2630 or equivalent harmonized European Standards. Screws shall not protrude in the direction of the rubber. Rubber parts shall not be painted.

11.5.8. Support of pipe work and valves

All necessary supports including structural steelworks foundations, hangers, saddles, sliding shoes, slings, expansion pieces, fixing bolts, foundation bolts, fixing and anchor points and all attachments shall be supplied to support the pipe work and its associated equipment in an approved manner.

Valves, meters, strainers and other devices mounted in the pipe work shall be supported independently of the pipe to which they connect.

11.5.9. Bolt, nuts and washers

All bolts, nuts and washers used in the jointing at flanged valves shall be of stainless-steel type 1.4571 (BS 320 S 31) and/or 1.4301/4571 (BS 304 S 15) to DIN 17007 or equivalent harmonized European Standards, i.e. bold made of 1.4301 with washer and nut made of 1.4571.

11.5.10.Ductile iron pipes and fittings

Iron pipes and fittings shall be ductile iron and comply with the relevant Standards. Non-standard specials shall be avoided. Unless otherwise specified, puddle flange thickness and diameter shall be similar to the flange of the corresponding diameter.

Spigot and socket joints shall be flexible and of an approved "push-in" or bolted gland type unless otherwise specified.

Flexible couplings shall be of a type approved by the Engineer.

11.6. Valves, penstocks and actuators

The works include procurement, transport, supply and installation of all standard valves, penstocks, hand stops, headstocks, actuators etc., required for the works.

Elements include:

- EV type valve EURO 20 DN200 flanged PN10, manual drive for retention and separators
- EV type valves EURO 20 mm DN80 flanged PN10, manual drive with built-in seating, telescopic poles and street hood, built-length L = 180 mm for installation on external fire hydrants.

Elements for the water meter include:

- water valve type 23 EURO 20 for a working pressure of 10 bar.
  - 100 together with telescopic poles and street hood
  - O 80
- flat bandwidth valve DN 32 mm.
- flat bandwidth valve DN 32 mm with a drain.
- flat bandwidth valve DN 25 mm.
- flat bandwidth valve DN 25 mm with a drain.

Elements for the fire water reservoir include:

- flat valve for a working pressure of NP 10 bar.
  - O 150
  - O 100
  - O 80
- angle valve with a float DN80, NP10 bar.

Elements for the fire hydrant network include:

- EV type valves EURO 20 flanged PN10, manual drive with built-in seating, telescopic poles and street hood, built-length L = 180 mm for installation on external fire hydrants.
  - O 100
  - O 80
  - O 50

All valves and penstocks shall be best water works quality and suitable for use in water or wastewater works (as appropriate) at all temperatures up to 45°C.

All valves shall be flanged if not specified otherwise. All flanges of the valve shall be according to DIN 2501 and in accordance with the required test pressure of DIN 2630 and shall satisfy the requirements stated in these standards or equivalent harmonized European Standards.

The face-to-face dimensions of all flanged valves shall comply with the DIN 3202 part 1 or equivalent harmonized European Standards or Turkish Standards

Valve bodies shall give the information about manufacturer's name; hydraulic test pressure; size of valve; direction of flow 'arrow' and applied standard, in accordance with DIN EN 19.

Unless specified otherwise; all standard valves shall have flanged joints of pressure rating PN16 and shall be to a class in excess of the maximum pressure they will attain in service including any surge pressures, but all valves shall be tested to stand a working pressure of 1.5 working pressure of pipeline or 6 bars, which is greater.

Valves shall be capable of withstanding the same test pressures as the pipe on which they operate. All nuts and studs subject to vibration shall be fitted with spring washers of locking taps.

All materials shall comply with the appropriate EN-ISO Standards and shall be subject to the Engineers' approval. All castings shall be free of blowholes and other defects.

Gate valves shall be provided with renewable seats and it shall be possible to remove the gates without removing the valve body from the pipe work. Penstock gates shall be provided with renewable sealing faces. Sluice valves and butterfly valves shall be suitable for flow in either direction. Gate face rings shall be screwed into the gate or alternatively securely pegged over the full circumference.

Butterfly valves shall be installed in the pipe work in such a manner that they can easily be removed from the line for dismantling and replacement of the seats, designed to give minimum leakage, unless otherwise specified.

Non-return valves on the main pump delivery branches shall possess high speed closing characteristics, with minimum shock on closing.

Packed glands shall be arranged for easy replacement of the packing, which shall be accessible without removal of the valve from the pipe. Precautions shall be taken to prevent corrosion of the valve spindles in contact with the gland packing.

Each valve or penstock gate or its operating equipment shall bear an approved brass nameplate stating its function in English and Turkish language.

Valves, cocks and operating spindles that are applied for submerged operation, shall be independent of external lubrication.

Extended spindles and headstocks shall be provided where necessary and shall be provided in stainless steel.

11.7. Water meters

The work includes procurement, transport, handling and installation of water meters type 'Multi Jet' or similar, dry propeller.

11.7.1. Applicable standards

- ISO 4064-1: 2005 Measurement of water flow in closed fully charged conduits - Meters for cold potable water and hot water. Part 1: Specifications
- EN ISO 4064-2. Water meters intended for the metering of cold potable water and hot water.

11.7.2. Supply

The water meter shall be proposed by the contractor for the approval of the Engineer, with the relevant acceptance certificates by the relevant Turkish public authorities.

The water meters shall be produced in accordance to international standards – ISO EN 4064.

- Water meter DN80 mm with horizontal turbine, type as WPI, class B, PN10, for fire protection water.
- Dry mechanism water meter DN30 mm with horizontal turbine, type as VVS-3, class B, PN10, for administrative building sanitary water.
- Dry mechanism water meter DN25 mm with horizontal turbine, type as VVS-3, class B, PN10, for Customs building sanitary water.

A primary characteristic of these meter is the dry dial mechanism, which are isolated from the water. Meters of this type are designed to measure the volume of consumed pure water, with temperatures up to 40 C and pressure up to 16 bars.

Accuracy class shall be B.

11.7.3. Installation

Installation procedures and method statements shall be submitted by the Contractor to the approval of the relevant Turkish authorities and the Engineer prior to procurement an installation.

Before installation of the meter, the water supply network should be flushed with water, to remove any debris. The filter shall be installed at the entrance of the water meter.

The direction of the arrow on the meter shall follow the as direction of the water flow through the supply network.

Water meter shall be placed horizontally with the dial facing up.

The water mater shall be protected from freezing.

11.8. Fire hydrants

The works include the supply, transport, handling, installation and putting into operation of Fire hydrants, above or underground.

11.8.1. Applicable standards

- EN 14339:2005: Underground fire hydrants
- EN 14384:2005: Pillar fire hydrants

11.8.2. Material

All hydrants shall comply with EN 14339 or 14384 respectively.

Placement and type shall be in accordance with the Contractor's drawings, and subject to approval of the Engineer.

Above ground fire hydrants to be DN80 mm, PN10, height H=1900 mm.

Underground fire hydrants to be DN80 mm, PN10, height H=750 mm

Fire hydrants include at least the following:

- Stopper, retaining ring, guide, bonnet tip, breaking ring, inlet piece, lower part of barrel, ductile cast iron
- Upper part of barrel, spindle nut, spindle guide: brass
- Bush, square socket, stem, key rod, spindle: stainless steel
- Retainer ring, cords for outlet, caps, bolts, double cut-off ball, drain: thermoplastic
- Protection, guide star, bonnet made of duro-plastic
- Rubber coating of stopper made of elastomer
- Corrosion protection
- Internal: vitreous enamel
- External underground: vitreous-enamel primer with 2-coat synthetic resin
- External above ground: duplex coating consisting of spray zinc coating with covering coat on EP/PUR basis

11.8.3. Installation

For above ground hydrants, installation shall include the following:

- A base of central type which ends up to a flange in the appropriate nominal diameter to connect to the service water pipe
- A body with anti-frost protection and automatic evacuator
- A head with one or two outlets ND 65, house connection type C
- A valve type 'n' or 'hp' which opens with course opposite to the flow,
- A hand-wheel for operation

11.9. Pumping equipment

The works include the supply, transport, handling, installation and putting into operation of the pumping system in the fire water reservoir, according to the Contractor's drawings.

The plant includes two pumps NKF 50-200/207 VdS with electric motors 18.5 kW, 2 VdS command cabinets, one with the function of the "Jockey" pump CR 5-18, all mounted on a metal frame.

11.9.1. General

The whole of the pumping works, machinery and apparatus shall be new and of first-class manufacture. For the purpose of the Contract, the following definitions shall apply:

- "Design point of performance" - means the total head developed between the pump unit inlet and outlet connections.
- "Static head" - means the difference between the free water surface level on the suction side of the pump and the delivery level.
- "External works friction head" - means the head required to overcome friction external to the pumping station and velocity head at the outlet of the pumping main.
- "External works losses" - means the friction and turbulence losses in all pipework and valves included in the pumping station beyond the pump delivery flange.
- "Internal works turbulence losses" - means the friction and losses in the pump and suction pipe work up to the pump delivery flange.
- "Total head" - means the sum of (b), (c), (d), and (e).
- "Net effective lift" - means the sum of (b) and (c).

11.9.2. Supply

Each pump shall be complete with all necessary ancillary equipment and fittings to render the unit complete and immediately ready for service. This shall include isolating valves, non-return valves, cooling water discharge pipe work, gland leakage pipe work, air release pipe work, pressure gauges, gauge pipe work, holding down bolts, access platforms and other items as appropriate. Where practicable, pressure gauges shall be wall mounted.

Apertures in pump head stools shall be guarded and, if outdoors, the guards shall be of solid polycarbonate or acrylic plastic to offer protection from wind and airborne particles.

All studs, bolts and nuts used in the construction of the pumps shall be of stainless steel.

All intermediate shafting between pumps and motors shall be provided complete with adequate guards.

All pumps, where possible, shall be of the same manufacture and design to simplify spares requirements and maintenance.

11.9.3. Factory acceptance testing

Characteristic and system curves for the pump against the various static heads to a reasonably large scale shall be supplied for their acceptance to the Engineer, along with the test results through their complete range of workable heads at the manufacturer's site. The pumps shall give results which conform to the curves. The curves shall also show pump efficiency and kW loading.

Where pumps are working in parallel curves for solo operation and all the various possible parallel combinations shall be submitted.

11.9.4. Installation in the fire water reservoir technical room

The pumps shall be lowered into the pumping room according to the recommendations of the producer, and according to a method statement approved by the Engineer.

Where possible the pumps shall be positioned so that a positive suction condition is obtained within the full curve of operation. The net positive suction head required (NPSHR) curve for the full range of operation shall be submitted which shall be compatible with that available to enable the pump to operate, without cavitation over the full range of flows at all liquid levels.

The design speed of any pump shall not exceed 1,500 rpm. Pump unit assembly design and the method of supporting rotating assemblies shall ensure that no unit or shaft operates at a speed within 25 % of any critical speed, and shall be submitted to the acceptance of the Engineer.

The rotating parts of each pump shall be supported by substantial bearings. The design shall be such that no thrust is transferred from the pump to the motor shaft where these do not form an integral unit. The combined thrust and journal bearings shall be capable of reverse rotation at 150 % of full forward speed.

Dry installed pumps shall be equipped with double acting mechanical seals with sealing water /sealing liquid connection and shaft sleeve. Submersible pumps shall be equipped with double acting mechanical seals with leak detection sensor in the oil chamber between the two seals. All mechanical seals shall be of material SiC/SiC. Where shafts are susceptible to wear at bearings and glands, renewable sleeves shall be fitted. Wear rings and bushes shall be fitted to the casing and impeller at the points of running clearance. Where sealing and lubricating water is supplied to bearings and glands, it shall be free from suspended solids and the associated pipe work shall be fitted with air release cocks and flow indicators.

11.9.5. Centrifugal pump

Centrifugal pumps characteristics shall be stable with the delivery pressure falling continuously from a maximum at the closed delivery valve condition. Characteristics shall be non-overloading and unless otherwise specified all pumps shall be suitable for parallel operation with other pumps delivering to the same system.

11.10. Hydraulic testing

Before pipe testing the trench must be filled on the pipe barrels, leaving the joints uncovered so as to prevent the pipeline from moving whilst leaving the joints accessible. Thrust blocks must also be constructed before

testing. On roads with heavy traffic the backfilling at joints may take place before testing if the Engineer so allows in writing. At least 2 days' notice must be given in writing to the Engineer before pressure testing of any section is commenced.

Pipes shall be filled and tested in sections of convenient lengths, which must not exceed 500 m. Where pipes are laid with steep gradients the length of pipes tested at any one time shall be as directed by the Engineer.

The ends of pipes under test shall be closed by means of caps or blank flanges with anchors all provided by the Contractor. Valves must not be used for this purpose. All scour valves and air valves shall be replaced by blank flanges before the commencement of the tests.

After laying, jointing and anchoring the pipe shall be slowly and carefully charged with water so as to avoid water hammer and all air shall be released through the upper pipe end or in case of an intermediate high point by installing a service connection with a tap. Pipes internally lined with mortar shall be allowed to stand full for at least 24 hours before testing.

The test pressure shall be applied by means of a manually or motor operated test pump connected to the pipe and two parallel installed pressure gauges calibrated at an approved laboratory.

During the test the pipe joints shall be inspected for leakage. Should leakage of water occur at the joints, the joint shall be reassembled to eliminate such leakage or, should this not prove possible, the Contractor shall supply and assemble new joints. Should any pipe or joint burst or should water leak through the body of a pipe or joint the Contractor shall forthwith remove the faulty pipe or joint and replace them with new. In all the above cases the length under test shall be re-tested as above described and the process repeated, if necessary, until the pipeline satisfactorily withstands the prescribed test.

A test report shall be prepared in respect of each and every test performed. The test report shall contain as a minimum the following data:

- Number and date of the test
- Description of the stretch tested with unambiguous indication of the extremities of the stretch
- Sketch showing in the order of laying, the number and the characteristics of the pipes, the fittings the specials and other apparatus incorporated in the stretch
- Duration of the test, test pressure, results obtained
- Decisions relative to possible repair works and conclusions

The test report shall be signed by the Contractor and the Engineer.

The Contractor shall provide labor, install and work the test pump, pressure gauges and all other equipment required for the test and he shall fill the pipes with water and subsequently empty them after the test, all to the approval of the Engineer. Water drained from the pipes shall be discharged in a way that does not affect the stability of the Works or adjacent structures.

The Contractor shall provide all labor, pumps, manometers and auxiliaries during the test periods; as soon as the Engineer may require. All tests shall be conducted in the presence of the Engineer.

If any leak in joints or evidence of defective pipe is disclosed, the work shall be immediately detected and corrected or replaced. No makeshift repairs or application of patching compounds shall be permitted. After the correction is made, supplementary tests shall be run until a satisfactory working condition is obtained.

Pipelines with an internal diameter greater than 100 cm may alternatively be tested by a combination of visual inspection from the inside and the use of equipment designed to test the tightness of individual joints. This test, however, does not relive the Contractor of his obligation to guarantee water tightness of pipelines. Furthermore, individual joints have to be testable (i.e. double gasket with spacing and devices to connect test equipment).

Pressure pipelines (together with all specials and valves incorporated) shall be tested with water in accordance with DIN 4279 and prEN 805:

Description	**test pressure**	**test duration**	**test criteria**
Ductile cast iron pipelines		ND ≤200: 3 hours	max pressure drop for
	NP 10: 1.5 MPa	200 < ND ≤400: 6 hours	NP 10: 10 kPa
	NP 16: 2.1 MPa	ND >400: 12 hours	NP 16: 15 kPa
Steel pipelines		ND ≤200: 3 hours	max pressure drop for
	NP 10: 1.5 MPa	200 < ND ≤400: 6 hours	NP 10: 10 kPa
	NP 16: 2.1 MPa	400 < ND ≤700: 12 hours	NP 16: 15 kPa
		ND >700: 24 hours	
Reinforced concrete pipes	1.4 x NP (NP <0.25 MPa) NP +0.1 MPa (NP >0.25 MPa	ND ≤700: 12 hours ND >700: 18 hours	average replaced water losses during the first 6 hours less than 0.15 l/m2/hour (wetted inner surface)
Prestressed concrete pipes	1.5 x NP (NP ≤1 MPa) NP +0.5 MPa (NP >1 MPa)		average replaced water losses during the first 6 hours less than 0.02 l/m2/hour (wetted inner surface)
PVC, PE-HD	Test according to DIN 4279		
GRP	Test methods of DIN 4279 shall be applied		

11.11. Cleaning, disinfecting and rinsing of water pipes

The cleaning and disinfection of water supply pipes shall take place in four stages.

11.11.1.Preliminary flushing

All pipes from 100 to and including 600 mm diameter shall be preliminarily flushed at least once at high rates of flow (velocity shall exceed 1.5 m/s). The Contractor shall prepare a flushing plan and submit it to the Engineer for approval.

11.11.2.Cleansing

All pipes for water supply shall be cleaned with clean water for at least 5 minutes at a rate of flow sufficient to obtain a velocity exceeding 1 m/s. This cleansing procedure shall be repeated until any trace of taste or smell has disappeared from the water.

11.11.3.Disinfecting of water supply pipes

Following the satisfactory cleansing for water supply lines the Contractor shall with the use of a portable dosing system or by some other approved method introduce a solution of a sterilizing chemical containing chlorine into the pipeline. The solution shall be introduced at a very slow rate and shall be of such strength as to give a chlorine concentration of not less than 50 parts per million (ppm) throughout the length of the pipelines.

All valves on the distribution system shall be opened successively, working progressively away from the place where the solution is introduced. Each valve shall be closed when the water discharged begins to smell of chlorine. The whole system shall then remain charged for 24 hours, after which the water shall show residual chlorine contents of not less than 10 ppm.

If no residual chlorine is found or if the residual chlorine is less than 10 ppm, the sterilization process shall be repeated until a satisfactory result is obtained.

11.11.4.Bacteriological testing of water supply pipes

After the disinfection period of 24 hours the water shall be evacuated from the water supply pipes and the pipe system shall then be refilled with potable water having a concentration of residual chlorine of about 0.1 ppm.

A number of water samples shall then be taken and subjected to laboratory tests for coliform bacteria. If the tests show presence of coliform bacteria, the whole cleaning and disinfection process from preliminary flushing shall be redone until the result is negative.

The above-described cleaning and disinfection procedure shall apply only to water supply pipes. Pipes for pumped sewage shall just be flushed and cleansed obtaining the above-described flow rates.

11.12. Pipe markings

All pipelines and objects shall be subject to brass pipe markings using plates and tags, according to Turkish Standards and prevailing rules.

12. BUILDING WORKS

12.1. Concrete and metal structural works

12.1.1. General

The work on concrete and metal structure includes: supply and transport of concrete constituents (including reinforcement where required), production on site or as ready-mix, transport to the point of laying, moving of mobile scaffolds, mounting and dismounting of the stationary scaffolds, formwork and reinforcement positioning, formwork removal, concrete protection and wetting, water pumping, procurement of required equipment and labor force.

Finishing includes not only curing and protection, but also the recess cutting of holes and grips for lighting installations, waterworks, sewerage, vapor heating and similar.

12.1.2. Applicable standards

Works shall be realized in accordance with applicable Turkish and EU standards.

12.1.3. Quality control

Testing during production shall be done by an approved laboratory with the testing frequency specified from the relevant Codes.

The tolerance on the proportioning of each product shall be check for each batch. Requirements regarding W/C ratios shall be fulfilled by each batch.

For ready mix concrete, each concrete delivery forms shall include the weighting of the constituents.

All concrete of grade ≥ C25/30 shall be subject to quality controls detailed below.

Quality controls are not covered by the EN 206-1 which applies to the production control of the batch plant. They shall be performed by a laboratory certified by an independent body. Reports of control results shall be sent to the Engineer.

Tests on hardened concrete

The frequency of the controls shall be of 3 (+1 per additional 200 m3) per 500 m3 or per concreting phase.

1 sample includes 3 test cylinders for the determination of the compressive strength at 7 or 28 days.

It is reminded that concrete specimens are kept on site in accordance with the requirements of EN 12390-2 "Testing hardened concrete - Part 2: Making and curing specimens for strength tests". They are kept after making at a temperature between 18°C and 22°C.

The average strength determined from any group of consecutive tests as well as each individual test result shall conform to the requirements of clause 8.2.1.3 of EN 206-1.

The Contractor shall institute a system of control charts depicting test results of all 28 day concrete strength and where applicable, accelerated compressive strengths.

Provision of Records:

The Contractor shall maintain written records that provide the following:

Date on which each section was concreted, class of concrete, time taken to place and the position of the section in the works.

Daily maximum and minimum temperatures.

Nature of samples and dates on which they were taken, including identification marks.

Results of tests on samples taken and description of concrete section represented by samples.

Tests on Fresh Concrete

2 consistency tests are performed for each delivery truck (one slump test prior to implementation and 1 test during placing). In case the concrete is mixed on site, 1 slump test shall be performed per hour of pouring. The temperature of the mix is taken before each consistency test.

Tests concerning the Resistance to Freezing & Thawing

Quality controls on the content of entrained air for XF2 exposure classes shall be carried out at the frequency of 3 (+1 per additional 1 000 m3) per 1 000 m3 or per structural element.

12.1.4. Reinforcement steel works

Material supply and handling

Reinforcing bars are high yield strength deformed ribbed weldable steel.

The steel grade is 500 MPa (characteristic yield strength). Bars shall comply with EN 10080, ductility class B according to Eurocodes EN 1992.

Welded fabrics are not allowed in structural works.

Reinforcement bars shall be free from loose mill scale, loose rust, deleterious amounts of salts, oil, grease and other foreign matter which may destroy the bond. Reinforcement bars shall be transported and handled in a manner to avoid bending or other damage. They shall be bundled and tagged for unambiguous identification. Storage shall be on firm supports at least half a meter above ground, on designated hardstand areas, and properly sheltered against rain, dust, and other contamination. Bars which are found to have reduced sections, visible transverse cracks at bends, or other damage, shall be rejected.

Smooth Steel Bars

For the use on the fire water reservoir, smooth steel type GA 240/360 according to Turkish Codes shall be authorized in accordance with the design.

Welded Reinforced Mesh

For the use on the fire water reservoir and the drainage retention ponds, steel mesh type MAG 500/560 according to Turkish Codes shall be authorized in accordance with the design.

Quality Control for steel reinforcement

Each delivery of reinforcement bars shall be accompanied by a test certificate from the manufacturer, stating buyer, order number, product, weight of delivery, diameter of bars, cast number, yield strength, tensile

strength, elongation, and chemical composition. Each certificate shall show date, certificate number, and authorized signature of the manufacturer. A visual check of conformity between order, certificate, and tagging shall always be done. Three samples shall be taken at random from each month's delivery and tested for yield strength, tensile strength, and elongation.

Planning and scheduling

The Contractor shall prepare detailed reinforcement plans and bar bending schedules in strict accordance with approved drawings. Steel grades, bar diameters, bar spacings, bending diameters, lap-lengths, lap-spacings, etc., shall be stated on the construction drawings. All bars shall be unambiguously identified by numbers on the plans and schedules.

Laps and splices

Lap-lengths and location of laps shall be shown on the construction drawings.

The minimum lap-length for deformed un-coated bars with a yield strength not exceeding 450 N/mm2 shall be 40 times the bar diameter if nothing else is indicated in the approved design.

Laps in slabs shall be staggered where possible so that not more than one half of the bars are lapped in the same section. Laps in walls and beams shall be staggered where possible so that not more than one third of the bars are lapped in the same section. The specified lap-length shall be increased by 50% if these limitations are not fulfilled, unless otherwise indicated in the approved design.

Mechanical couplings shall not be used.

Placement, Tying, Supports

Reinforcement shall be accurately placed in accordance with the drawings and shall be firmly secured and held in position so it will not move during steel fixing and concreting works.

Bars shall be tied together at all intersections; the ends of the tying wire shall be bent away from the cover layer.

The spacing of supports shall always be close enough to maintain the specified cover layer within the specified tolerances.

Reinforcement shall be supported by spacers against all form sides.

Reinforcement layers shall be supported against each other by steel chairs. In no event shall steel chairs or steel supports extend into the cover zone.

Concreting shall not commence prior to the inspection and acceptance of the reinforcement by the Engineer.

Tolerance limits

Length and spacing, in assembled net, for steel bars are stated as follows:

- Length of bars must have a tolerance of +/- 3 cm;
- The dimension of stirrups must have a tolerance of +/- 1 cm;
- The overlapping (laps) of bars must have a tolerance of +/- 3 cm;
- The stirrup' distance, in assembled meshes, must have a tolerance of +/- 2 cm.

Particular attention must be given to any over-length of bars that could reduce the thickness of the concrete cover.

Concrete covers

The minimum cover shall be as shown on the reinforcement drawings. Where no cover is indicated, the minimum thickness provided shall be not less than

- 50mm on buried parts / foundations
- 30 mm on all other parts.

It is reminded that, as per Eurocode 2 clause 4.4.1, the nominal concrete cover is: cnom = cmin + Δcdev. The tolerance Δcdev is -0 mm / + 10 mm.

12.1.5. Cement mortar floor finishing

The works include making of lathed cement screed out of cement mortar, ratio 1:3, and placing of the screed on the inside floor slab.

12.1.6. Brickwork

General

The work includes materials supply, transport, making of plaster, mortar and brickwork. Also, the work includes making of all the holes and grooves for the passage of vertical sewer lines, heating pipes and electrical cables, gutter pipes, exhaust chimneys, etc., with filling of grooves and holes with plastering after completion of installations.

Brickwork Material Characteristics

- Brick shall be without lime and saltpeter
- River sand shall be free of organic impurities and sludge
- Hydrated lime and cement powder shall be properly cared for
- Water for plaster shall be clean, without any organic compounds that could adversely affect the quality of plaster.
- Freeze/Thaw resistance shall be F0
- Active soluble salts content shall be category S0

<u>Partition walls thickness 10cm</u>

Partition walls thickness 10 cm shall be built using brick in lime cement mortar (ratio 1:2:6). Bricks shall be moisturized before building in. Joints shall be cleaned 2 cm depth.

Brickwork shall be in horizontal rows, without fragments smaller than 1/4 brick, with the proper connections and wall surfaces, edges and vertices under plummet.

For all the partition walls (d = 12 cm) the concrete corners and lintels (with plating and metal framework) shall be included and shall not be paid separately. The reinforced concrete corners have a height h = 200mm, concrete type is MB 20, reinforced with 2 Ø 14 and the stirrups U Ø 6/150mm.

Connection between the brick walls and reinforced concrete walls or pillars shall be derived by connecting wire diameter □3mm in each second row of bricks with appropriate connections from the concrete elements.

Connection between partition walls thickness d=12cm with massive walls shall be in every fourth row by dropping half of brick.

Partition walls thickness 20cm

Partition walls thickness 19cm shall be built using hollow clay block (dimensions 25x19x19cm) in lime cement mortar (ratio 1:2:6). Clay blocks shall be moisturized before building in. Joints shall be cleaned 2 cm depth.

The tolerance limits for the measurement are stated as follow.

Perpendicularity of the walls must be checked with folding rule and plumb – line and must be:

- for high up to 3 m: +/- 1 cm,
- for high up to 5 m: +/- 2 cm.

12.1.7. Rendering work

General requirement

The walls shall be plastered only if the walls are dry and if the weather is appropriate.

The walls shall be clean, without oil from formwork remaining.

Rendering work on the inner side of the facade concrete walls and internal reinforced concrete walls and brick masonry walls in the gate and customs building shall be by using two layers of lime cement mortar, ratio 1:2:6, including prior cement slurry spraying. Surfaces shall be wetted if it's necessary to achieve the necessary moisture, before applying the first coat of mortar.

Rendering work shall be in two layers of total thickness of 2.0 to 2.5 cm. The first layer shall be made of course, sharp sand and the second, final layer, shall be of fine sand. The second layer shall be applied after the rough first layer was dried completely. The second and final layer shall be sifted through a dense mesh.

12.1.8. Steel roof

Structure

The work includes production, transport and assembly of the steel roof structure, according to project and structural calculation.

Contractor must have certified equipment for welding and welders, as well as attest documentation for all the basic and supplementary material. Before construction the contractor shall do all the detailed drawings and welding plan and be approved by the Engineer.

The quality of the base material shall be S235.

The level of acceptability for the seams shall be class "C" according to EN 25817

Corrosion protection shall be based on polyurethane for the degree of corrosivity of C3, long life 15 years according to EN 12944-1 to 8.

The final shape must have a tolerance of +/- 1% from the designed one.

12.1.9. Ancillary steel works

Canopy

The work includes production, transport and assembly of the steel structure for the canopy above the entrance, according to project and structural calculation.

Contractor must have certified equipment for welding and welders, as well as attest documentation for all the basic and supplementary material. Before construction the contractor shall do all the detailed drawings and welding plan and be approved by the Engineer.

The quality of the base material shall be S235.

The level of acceptability for the seams shall be class "C" according to EN 25817

Corrosion protection shall be based on polyurethane for the degree of corrosivity of C3, long life 15 years according to EN 12944-1 to 8.

The final shape must have a tolerance of +/- 1% from the designed one.

Stairs

The work includes purchase of the material, transport and production of the interior stairs, access stairs to the equipment room of the fire water reservoir, access stairs to the doors of the technical rooms, access plateau and ramp railing made of steel sections and perforated sheet metal.

Stairs shall be 4x17/30, width of stair tread 130cm.

The work shall be carried out fully in accordance with the scheme and details. Before the start of the works, it is necessary to submit a detailed workshop drawings and appropriate certificates of approval to Engineer. The finishing layers shall be corrosion protection primer for metal, and a double layer of oil corrosion protection paint, in the tone chosen by the Engineer.

Railing

The work includes purchase and installation of fences for the internal and external stairs and ramp made of steel pipes and steel cables as well as all necessary flashings, battens, gaskets etc.

Before construction the contractor shall do all the detailed drawings and be approved by the Engineer. He shall submit the relevant certificates to the Engineer.

Binding to the wall and the plate shall be over the anchor plate. All steel connections shall be by welding.

The finish shall be in acrylic paint for metal, in the tone approved by the Engineer. The finish shall also include a double corrosion protection.

Ladder

The work includes purchase and installation of the metal ladder for roof access as well as all necessary flashings, battens, gaskets etc.

Before construction the contractor shall do all the detailed drawings and be approved by the Engineer. He shall submit the relevant certificates to the Engineer.

Waterproofing

A qualified workforce and the appropriate tools shall be used for waterproofing works. Materials shall be properly stored prior to use.

During waterproofing works or after their completion, while the insulation is unprotected, it is prohibited walk over them (except for hydro-workers). After completion, only those civil works, which are related to the protection of insulation, shall be performed.

12.1.10.Insulation

The work includes supply of material, transport and installations of insulation material.

Thermal insulation of ground floor and slab above 1st Floor

Thermal insulation shall be done according to the Contractor's drawings, the work shall be performed by the manufacturer's instructions and applicable regulations.

Thermal insulation of the facade walls

Thermal insulation shall be done according to the Contractor's drawings, manufacturer's instructions and applicable regulations.

Acoustic Insulation for the floor slab

Acoustic insulation for the floor slab shall be done according to the Contractor's drawings, manufacturer's instructions and applicable regulations.

12.2. Facade and internal aluminum joinery

12.2.1. Applicable standards

- TS 79-1 (April 2003) Washers-Part 1: General Features
- TS 432-1 EN ISO 1478 (April 2000) Bolts - Sheet Bolts - Part 1: General
- TS 498 (November 1997) Calculation Values of Loads to be Taken in the Dimensioning of Structural Elements
- TS 825 (May 2008) Thermal Insulation Rules in Buildings
- TS 4644 EN 12211 (March 2005) Windows and directions - Resistance to feed rate - application method

- TS 4922 (October 1986) Surface Treatment of Metallic Materials - Anodic Oxidation of Aluminum and Formable Aluminum Alloys (Anodizing), Technical Specifications
- TS 7677 (February 1992) Corrugated Sheets-Aluminum Alloys
- TS 7677 (February 1992) Corrugated Sheets-Aluminum
- TS EN 573-1 (March 2004) Aluminum and aluminum alloys - Chemical structure and shape of formable products - Part 1: Numerical designation system
- TS EN 485-1+A1 (June 2010) Aluminum and aluminum alloys – Sheet, strip and plate – Part 1: Technical inspection and delivery process
- TS EN 507 (February 2003) Roofing sheets - Metal - Fully fitting - Made of aluminum sheet – Features
- TS EN 508-2 (February 2002) Roofing sheets - Metal - Self-supporting - Made of steel, aluminum or stainless steel - Properties -Part 2: Aluminum
- TS EN 515 (April 1997) Aluminum and Aluminum Alloys - Temper Designation of Formable Products
- TS EN 754-1 (April 2010) Aluminum and aluminum alloys - Cold drawn wire rod/bar and tube - Part 1: Technical requirements for inspection and delivery
- TS EN 755-1 (March 2010) Aluminum and aluminum alloys - Extruded wire rod/rod, pipe and profiles - Part 1: Technical requirements for inspection and delivery
- TS EN 1026 (November 2002) Doors and Windows - Air Permeability - Test Method
- TS EN 1301-1 (April 1999) Aluminum and Aluminum Alloys-Drawn Wires-Part 1: Technical Delivery and Inspection Conditions
- TS EN 1396 (January 2003) Aluminum and aluminum alloys - Coil coated sheet and tape - General applications – Features
- TS EN 12020-1 (March 2010) Aluminum and aluminum alloys - Precision profiles manufactured by extrusion from EN AW-6060 and EN AW-6063 alloys - Part 1: Technical inspection and delivery conditions
- TS EN 12258-1 (April 2001) Aluminum and aluminum alloys - Terms and Definitions - Part 1: General Terms
- TS EN 14399-1 (April 2010) Preloaded high strength structural bolting tools – Part 1: General specifications
- TS EN 14509 (January 2009) Self-supporting double-faced metal-clad insulation panels - Factory manufactured – Specifications
- TS ENV 1090-3 (April 2004) Steel structure applications - Part 3: Additional rules for high yield strength steels

- TS ENV 1999-1-1 (March 2002) Design of aluminum structures - Part 1-1: General rules - Rules for buildings (Eurocode 9)
- TS ISO 8992 (April 2008) Fasteners – General properties of bolts, screws, studs and nuts

General

The work includes making of contractors' drawings, production of elements, packaging, transport, storage, vertical and horizontal transport on site, installation and assembly of all the necessary parts, fittings, glazing with type of glass defined in the design.

Doors and windows shall be installed using the dry method. Joinery shall be flexible and firmly embedded. Joints shall be resistant against wind and moisture and must provide protection against sound, heat and drain rainwater.

Sealing material shall be resistant to oxidation, sunlight, water, atmospheric effects, cannot change its shape and elasticity because temperature changes and must not contain toxic ingredients.

Fittings for joinery command shall allow easy opening/closing doors and windows. They shall prevent opening of the outside i.e. they shall be resistant on the pressure of 100 kP/m2. Functional and visual parts shall be protected from corrosion. Visible parts must have a high-quality aesthetic appearance.

Glazing shall be made with thermal or safety glass, according to the description of each position, all in accordance with applicable standards for glazing.

The work includes production and placement of aluminum sectional windows with thermal gap, glazed with thermo-pan glass and all the other parts given in supplier details, certified and marked CE.

Profiles shall be plastic-coated in color and tone by agreed by the Engineer. Heat transmition coefficient for the frame aluminum profiles shall be maximum 2,8 W/(m2xK)

Sealing shall be achieved with three-layer sealing rubber EPDM quality, hardness 50 to 60 Shore (SH), which is resistant on temperatures from - 60º C to + 100ºC.

All elements shall be glazed with thermal glass 4+12+4mm, transparent, float quality. Heat transmition coefficient for the glass shall be maximum 1,6 W/(m2xK)

Fittings on the open-able elements, as well as locks and door knobs, certified and marked CE.

- Following dimensions (in cm) are used in the administration and customs building:
- dim. 100/260
- dim. 200/260
- dim. 200/260 angle
- dim. 60/60
- Following dimensions (in cm) are used in the customs warehouse:
- dim. 575/100

12.2.2. Windows

The work includes production and placement of aluminium sectional windows with thermal gap, glazed with thermo-pan glass and all the other parts given in supplier details, certified and marked CE.

Profiles shall be plastic-coated in color and tone by agreed by the Engineer. Heat transmition coefficient for the frame aluminium profiles shall be maximum 2,8 W/(m2xK)

Sealing shall be achieved with three-layer sealing rubber EPDM quality, hardness 50 to 60 Shore (SH), which is resistant on temperatures from - 60º C to + 100ºC.

All elements shall be glazed with thermal glass 4+12+4mm, transparent, float quality. Heat transmition coefficient for the glass shall be maximum 1,6 W/(m2xK)

Fittings on the open-able elements, as well as locks and door knobs, certified and marked CE.

- Following dimensions (in cm) are used in the administration and customs building:
- dim. 100/260
- dim. 200/260
- dim. 200/260 angle
- dim. 60/60

Following dimensions (in cm) are used in the customs warehouse:

- dim. 575/100

12.2.3. External doors

Applicable standards

- EN 13241-1:2003+A1:2011: Industrial, commercial and garage doors and gates. Product standard. Products without fire resistance or smoke control characteristics.

Administrative and Customs Building

Double fire doors
Double fire protection doors shall be made of steel sheet 1mm thick, filled with incombustible mineral wool and opening to the outside and in everything according to the project specifications. Fire resistance shall be 120 minutes.

All doors proposed to the acceptance of the Engineer shall be certified and marked CE.

Doors shall be equipped with anti-panic door handles on the inside and installed in a "blind" frame of steel box profiles 20/30mm.

Seal all joints with silicone sealant on the facade and with acrylic sealant on the interior side. The door shall finally be painted according to specifications.

Following dimensions (in cm) shall be used:

- dim. 150/260

- dim. 200/260

Single fire doors

Single fire protection doors shall be made of steel sheet 1mm thick, filled with incombustible mineral wool and opening to the outside and in everything according to the project specifications. Fire resistance shall be 120 minutes.

Doors shall be equipped with anti-panic door handles on the inside and installed in a "blind" frame of steel box profiles. 20/30mm.

All doors proposed to the acceptance of the Engineer shall be certified and marked CE.

Seal all joints with silicone sealant on the facade and with acrylic sealant on the interior side. The door shall finally be painted according to specifications.

Following dimensions (in cm) are used:

- dim. 100/260

Customs Warehouse

Single Doors with Over-Light

External single doors with over-light shall be made of Aluminium section and filled with sandwich panels in the dimension 100/300 cm.

Profiles shall be plastic-coated in color and tone by agreed by the Engineer.

All doors proposed to the acceptance of the Engineer shall be certified and marked CE.

Sealing shall be achieved with three-layer sealing rubber EPDM quality, hardness 50 to 60 Shore (SH), which is resistant on temperatures from - 60º C to + 100ºC. Fire resistance shall be 120 minutes.

Elements shall be glazed with thermal glass 4+12+4mm, transparent, float quality.

Fittings as well as locks and door knobs, certified and marked CE.

Sectional industrial doors

The work includes supply, transport and installation of sectional industrial doors for warehouse with all necessary parts.

Sectional industrial doors shall be made of aluminium section and fully filled with sandwich panels. The supporting structure and frame of the wings shall be made of steel thermal panels. They shall be painted in the color of choice of the Engineer.

All joints between door frames with the supporting structure shall be processed with the profiled tires. Fire resistance shall be 120 minutes.

All doors proposed to the acceptance of the Engineer shall be certified and marked CE.

Doors in dimension 300/300 cm shall be with ceiling motor, remote control and safety cable.

12.2.4. Internal doors

Single Fire Doors

Single fire protection doors shall be made of steel sheet 1mm thick, filled with incombustible mineral wool and opening to the outside and in everything according to the project specifications. Doors shall be installed in wall thickness minimum 12cm. Fire resistance shall be 120 minutes.

All doors proposed to the acceptance of the Engineer shall be certified and marked CE.

Doors shall be equipped with anti-panic door handles on the inside and installed in a "blind" frame of steel box profiles. 20/30mm.

Seal all joints with silicone sealant on the facade and with acrylic sealant on the interior side

Single Full Doors

Interior single doors shall be made of aluminium profiles in the width of the wall (without breaking the cold bridge) in profiles, filled with aluminium sandwich panels. The doors shall be installed in the wall thickness minimum d=12cm. Profiles shall be plastic-coated in color and tone agreed by the Engineer. Finishing aluminium sandwich panels shall be in color and tone agreed by the Engineer.

All doors proposed to the acceptance of the Engineer shall be certified and marked CE.

Fittings as well as locks and door knobs, certified and marked CE.

The doors shall be equipped with standard fittings, lock with a cylindrical pad and all necessary strips.

12.2.5. Internal partitions

Glass Partitions

The partitions of the office space shall be made of multiple internal glass, with the fixed parts and single door aluminium profiles. Profiles shall be plastic-coated in color and tone agreed by the Engineer.

Glazing shall be with double safety glass 3.3.1+12+3.3.1 mm, or as recommended by the manufacturer and approved by the Engineer.

Lightweight Partititons in Sanitary Rooms

The work includes production and placement of lightweight partitions with doors in sanitary rooms.

The construction of the wall shall consist of vertical, horizontal and angular elements. They shall be made from aluminium (and stainless steel) with uninterrupted "thermo-bridge", plastic-coated in the color and tone agreed by the Engineer.

Filling of fixed elements and door wings shall be made of composite laminated plates. The color of the plates shall be agreed by the Engineer. Fixed parts and the doors shall be at a distance of 20 cm from the floor of the room. The doors shall be equipped with standard fittings, gasket, cylinder lock with a pad and all necessary strips.

The connection of fixed parts with the floor and the wall shall be with anchor plate and stainless bolts.

12.3. Internal finishing works

12.3.1. Applicable standards

TS EN 13914-1, TS EN 13914, TS EN 998-1, TS EN 13279-1, TS EN 197-1, TS EN 459-1, TS EN 13496, TS EN 13279-1, TS EN 13279-2, TS 13744, TS EN 1504-2, TS EN 13914-1, TS EN 13914-2, TS EN 998-1, TS EN 771-1, TS EN 771-3, TS EN 771-4, TS EN 15283-1, TS EN 634-2, TS EN 1504-3, TS EN 13496, TS 13744

12.3.2. Ceramic tiling

General

The work includes supply, external and internal transport, installations and all necessary work with material.

Placing is in the mortar: Mortar shall be prepared from a mixture of cement, sand and water and, if it is necessary, with the addition of some asset (to accelerate bonding, coating, waterproofing, etc.). Cement shall comply with the provisions of the standards. Water shall not contain ingredients that would be harmful to the surface, tile and sealer.

If adhesives are proposed to be used by the contractor, only those adhesives that are declared by the manufacturer for a particular type of work and approved by the Engineer can be used. The declaration must include: type of glue at the exploitation request, type of ceramics for which is made, type of surface to which it can be glue-coated and resistance to the influence of surface water, frost, chemical and other agents. The manufacturer shall provide detailed instructions for use and the necessary preparations for bonding.

Sealing materials shall be used to close the joints between the tiles, for the closing of expansion joints between the limited size of the pavement, and joints of the wall tiling to the floor and the ceiling. It shall be used only by the manufacturer instructions.

Following conditions must be achieved in the ceramic works:

- The lining inside the building - ceramics works shall be carried out after the room is plastered, frames for windows are set and the installation is tested (unless otherwise stipulated in the description of works),
- Coating wall surfaces shall be made fully straight and vertical, with no waves, bumps and hollows, with a uniform and sufficiently broad joints,
- Tiling of floors shall be done horizontally, without waves, bumps, or flat surfaces with the required slope, with a uniform and sufficiently wide.

Coating with ceramic tiles shall be with couplings appropriate width. Upon completion of the tiling, couplings shall be treated by appropriate sealing material.

At points of penetration of installation pipe and the bottom grid, the tiles must be precisely tailored and fitted. The receiving surfaces, walls and slabs shall be quality prepared for the implementation of ceramic work.

In order to protect the finished work, it is necessary to prevent any traffic and movement of people and equipment, within three days after completion of ceramic works.

Covering walls and floors with I-Class ceramic tiling

Size, color, surface and final appearance shall be agreed by the Engineer. Tiles shall be placed "Joint to joint" on appropriate layer of adhesive. 3mm gap width shall correspond to the processing tile mass. For all open wall corners appropriate safety PVC fitting element shall be incorporate.

Sanitary rooms walls are covered from floor to ceiling. Kitchen walls are covered up to the height of 90-150cm.

Covering floors in technical rooms with I-Class ceramic tiles

Ceramic shall be unglazed. It shall be installed on internal ground floor in the lobby. Granite tiles shall be with non-slip surface. Size, color, surface and final appearance shall be agreed by the Engineer.

Tiles shall be placed "joint to joint" on appropriate layer of adhesive. 3mm gap width shall correspond to the processing tile mass.

Lining internal stairs with I-Class granite tiles

Ceramic shall be unglazed. It shall be installed on stair treads and forehead. Granite tiles shall be with non-slip surface (R=4 for horizontal parts). It shall be used granite ceramic resistant to atmospheric changes. Size, color, surface and final appearance shall be agreed by the Engineer. Tiles shall be placed "joint to joint" on appropriate layer of adhesive.

Lining floor granite baseboard

It shall be with a height of 10cm and placed in cement mortar layer. It shall be made from the same granite type as floor tiles and joints shall follow those on the floor.

Setting threshold of ceramics

The threshold of ceramic granite shall be placed where the PVC floor merge tiles floor. The threshold shall be made of ceramics with the same quality as the floor and placed in cement mortar layer.

12.3.3. Plaster works

The work shall include material supply, transport, storage and installation of plasterboards for ceiling and walls with all necessary parts and grid of the metal frame with hangers.

Plasterboard shall be, properly transported, stored and protected from moisture.

For all materials used for plasterboard ceilings contractor shall submit certificates to the Engineer. Certificates shall not be older than one year from the date of commencement of works.

Before work beginning contractor shall inspect all surfaces and inform Engineer. Plane of the finished wall or ceiling may not have deviations greater than the length 1mm/1m.

Ceiling made of plasterboard plates

Monolith ceiling shall be made of plasterboard plates placed on the steel substructure.

Revision hole shall be made by design. For all panels and panel joints to the walls, install the appropriate Joint Tape.

Ceiling shall be mounted after completion of all installations and other works provided for under the ceiling.

Walls made of plasterboard plates

Walls (thickness=12cm) shall be made of plasterboard plates placed on the steel substructure.

Spacing between the plasterboard panels shall be filled with mineral wool thickness 10cm.

Grid of the metal shall be wide enough to provide support and shall be at least 24mm. Grid of the metal frame shall be made of metal sheet thickness of at least 0.5mm and protected from corrosion, and can be perforated for easy fixing and mounting plate.

12.3.4. Painting works

The work shall include material supply, transport, storage and painting of the walls and the ceiling with semi-dispersive paint, including skimming and all the necessary preparatory works. The works shall also include the painting of the visible outside walls of the fire reservoir with protective paint for concrete works.

All walls and ceilings shall be smoothing with filling compound, completely flat before painting.

Materials not according to Turkish and relevant EU standards shall not be accepted. For all materials the contractor shall submit the Engineer a certificate of quality. Prior to procurement of materials, contractor shall submit to the Engineer color chart for the appropriate materials.

All coatings shall be with colored pigments resistant to light

Before work beginning, contractor shall clean all surfaces from mechanical impurities, dirt and grease.

The substrate for the paint works shall be:

- hard enough without the salt content of various active particles of lime
- without the particles of coal and other organic substances, which are water soluble and oil
- to be dry and not contaminated with resin, plaster, plastics or other contaminants which are difficult to clean.

Prior to painting wooden surfaces shall not be soaked with oil or bad coating, shall not contain more than 15% humidity. They shall not be damaged, badly treated, fissured, insufficiently connected (glued), or rotten.

Multiple coats shall be completely dry before the next one is applied. It shall not notice the traces of the brush or roller on painted surfaces. Color (tone) shall be of uniform intensity and without stain.

Coatings shall be stable to light and resistant to washing with water, supplemented with 2% neutral detergent. External coatings shall be resistant to atmospheric agents.

12.4. External works

Applicable standards

- TS EN ISO 13788 (27.04.2004): Thermal Performance of Building Components and Building Elements in Humid Environment – Internal Surface Temperature to Prevent Critical Surface Humidity and Condensation Inside Building Components – Calculation Methods
- TS EN ISO 10211-1 (07.11.2000): Thermal Bridges in Building Constructions - Heat Flows and Surface Temperatures - Part 1: General Calculation Methods
- TS EN ISO 10211-2 (29.11.2001): Thermal Bridges in Building Construction - Calculation of Heat Flows and Surface Temperatures - Part 2: Linear Thermal Bridges
- TS EN ISO 14683 (21.03.2000): Building Construction - Thermal Bridges - Linear Thermal Permeability - Simplified Method and Accurate Values
- TS 8441 (14.04.1990): Thermal Insulation Calculation Methods – Rectangular Thermal Bridges on Plane Building Surfaces
- TS EN 13495 (14.04.2004): Thermal Insulation Materials Used in Buildings – Determination of Tensile – Breaking Strength of External Composite Thermal Insulation Systems (ETICS) (Block Foam Test)
- TS EN 13496 (27.09.2005): Thermal Insulation Materials Used in Buildings - Determination of Mechanical Properties of Glass Fiber Plaster Mesh
- TS EN 13497 (27.09.2005): Thermal Insulation Materials Used in Buildings – Determination of Impact Resistance of External Composite Thermal Insulation Systems (ETICS)
- TS EN 13498 (27.09.2005): Thermal Insulation Materials Used in Building Applications – Penetration of External Composite Thermal Insulation Systems (ETICS)

Gutters

General

Quality and size of the sheets shall be in compliance with relevant Turkish and EU standards.

Metal sheet shall be protected from the harmful effects of concrete, brick or mortar by placing layers of tar paper.

All elements for the mounting shall match to the type of sheet metal. Auxiliary connecting materials: solder, rivets, bolts, etc. shall be in compliance with the appropriate applicable regulations, and corrosion resistant.

Horizontal gutter

The work includes production and assembly of horizontal gutter (rectangular section 10x10cm), made of galvanized sheet-metal sheet width b=40 cm coated with PVC. Sheet-metal thickness shall be minimum 0.8 mm.

Longitudinal slope of horizontal gutter shall be 1% to vertical gutters.

Vertical gutters

The work includes production and assembly vertical gutters (rectangular section 10x10) made of galvanized sheet-metal. Sheet-metal thickness shall be minimum 0.8mm. Gutters shall be connected to the facade on every 1.5m or more often.

Canopy cover

The canopy shall be cover with aluminium sheet-metal. Size of the panels shall be by the design specifications. Position shall be in full compliance with the design and the manufacturer's instructions.

Flat roof canopy will be covered with zinc or aluminium plate with minimum d = 0.8mm and PVC coated.

12.5. Plumbing and sewage

12.5.1. Water plumbing

The work includes full supply of equipment, delivery on site, handling, storage, and installation of all elements for the water plumbing in the gate and customs building.

The work includes hydraulic testing of the water pipe network to the test pressure, cleaning, disinfecting and rinsing the water installations prior to putting into operations and bacteriological testing of samples for drinking water approval.

Applicable Standards

TS 605, TS 378, TS 325, TS 6, TS 326, TS 823, TS 366, TS 800, TS 366, TS 2744, TS 2748, TS 437, TS 274, TS 544, TS 8080, TSEN 263, TS 6432, TSEN 232, TSEN 247/7, TSEN 263, TS 418/1, TS275, TS 5434, TS 325, TS378, TS327, TS 326, TS2821/1, TSEN 671/1, TSEN 671/2, TS824, TS 1863, TS 1911, TS 736, TS 507, TS 378, TS 737, TS 10, TS 80, TS 811, TS 816, TS 931, TS 2736

Water Pipes

The work includes supply, transport and installation of water pipes and fittings PP-R (polypropylene copolymer), for operating pressures up to 10 bar. These pipes shall be used for installation in internal water lines for cold and hot sanitary water. Diameters used are:

- DN40 mm
- DN32 mm
- DN25 mm
- DN20 mm
- DN15 mm

PPR system components shall be produced in accordance with applicable Turkish and EU standards, like DIN 8077 and DIN 8078, DIN 4726, EN 15874.

Only components not damaged or contaminated, either during storage or transport shall be used for installation works.

Transport and storage

During their transport it is not allowed to drag pipes over the ground or lorry deck. The components/pipes shall not be transported by throwing or letting them fall off the lorry to the ground. If they are transported to/on the site then they shall be protected against mechanical damage and stored at the spot on a suitable underlay were protected against dirt, solvents, direct heat (contact with a radiator, etc.).

The components shall supply in protective covers (pipes in polyethylene bags, pipe fittings also in sacks or cardboard boxes) and it is desirable to let them in these as long as possible before the start of installation works (as a protection against dirt).

Installation

A minimum temperature level for plastic piping installation is, with regard to welding, +5 °C. At lower temperatures it is difficult to provide working conditions for high quality pipe joints.

Components of plastic piping systems shall be during their transport and installation protected against impact, falling, blow or any other mechanical damage.

Pipe bending shall be done at +15°C. For pipes of diameter range 16 – 32mm a minimum bending radius shall be equals to eight diameters (D).

Components shall not be exposed to open fire.

Pipeline crossings shall be made with the use of components specially designed for this purpose.

Joining of plastic parts shall be done by polyfusion welding, or by the use of electric fittings and butt-welding techniques. A high-quality homogeneous joint is the result. An exact working process and appropriate tools shall be used in joining procedures. It is not recommended to weld EKOPLASTIK components together with other brands (for reason of demand of warranty).

Threaded fittings shall be used for screw-type joints. Thread-cutting directly to plastic components is not allowed. Threads shall be sealed with a special Teflon tape or sealing compounds.

If beyond a combined pipe fitting the line continues in form of metal piping then no welding or brazing is allowed in places close to this point because of potential hazard of heat transfer to the fitting.

If elbows for wall mounting or wall mounting groups are to be closed before draining fittings are fixed (such as during pressure tests, etc.) then plastic pipe closers shall be served best to this purpose.

Pipes shall be installed in a minimum gradient of 0.5% towards the lowest system points where system emptying by drain faucet or shut off valves with outlet is made possible.

The piping system shall be divided into separate parts that can be closed, if necessary. Straight valves and plastic ball taps shall be used for this purpose. For build-in installation the shut off valves or ball taps shall be used. Fitting functions (closing/opening) shall be tested before they are installed. A wall mounting group with tap connectors shall be used in a termination place where valve mixers are installed. wall mounting group with tap connectors for gypsum wall – with exact hole spacing 20 x 1/2"is determined for the assemblies where the grooves for stabilization, e.g., while installing under gypsum wall, are not used. The hole spacing is the same as of valve mixers, and it can be adjusted to 100, 135 mm.

When ducting the distribution under the wall it is advisable to use wall mounting group with tap

connectors 20 x 1/2"or 25 x 1/2", where the hole spacing of the threads is shifted so as the possible roughness of the distribution could be adjusted by mounting extensions. The same shall be used for valve mixers of spacing 150, 135, 100 mm. The use of this set helps to complete the installation in high quality and quickly, without any inaccuracies.

If the distribution system is terminated by pipe bends, then their fixed and accurate positioning must be ensured. If two wall-mounted bends are installed for dispensing valve mixers (bath tub, shower and

washbasin mixers) their identical height and parallel pipe fitting axis must be observed. No torsion load to wall mounting group with tap connectors may occur as a result of dispensing mixer installations.

The elements shall be mounted to the assembling plate of on-wall plates which helps to keep their exact positioning. The assembling plates have installation holes to install the plates according to common spacing sizes of dispensing valve mixers.

Storerooms of plastic components shall be separated from such areas where solvents, adhesives, paints or similar products are stored.

A minimum one-meter distance between plastic components and radiators shall be maintained when storage areas are moderately heated up to +5 °C.

Plastic pipes in stock shall be supported along their whole lengths or protected in another suitable way against deflection. Plastic pipe fittings are usually stored in sacks on palettes or freely loaded in boxes, containers, baskets, etc. Maximum storage height of one meter must be respected if plastic pipes are stored in plastic sleeves and/or pipe fittings in plastic sacks. Each of the different types of pipes and fittings shall be stored separately. When dispatching from storage, the oldest stock shall be dispatched first.

Thermal Insulation

The work includes supply, transport, handling and installation of thermal insulation for hot water pipes with the dimensions as follows:

- DN32 mm - insulation 9x42x2000 mm
- DN25 mm - insulation 9x35x2000 mm
- DN20 mm - insulation 9x28x2000 mm
- DN15 mm - insulation 9x20x2000 mm

Insulation in the process of the burning shall not release toxic gases. Thickness shall be minimum 9mm.

Brass Valves Straight

The work includes purchase, transport and installation of brass ball valves with chrome cap and all necessary parts.

Brass valves shall be with butterfly for closure / opening, with chrome-brass cap on screw and with rosette for installation on distribution systems of cold and warm water beneath the wall covering in the toilets, as required in the design. with butterfly for closure / opening, with chrome-brass cap on screw and with rosette for installation on distribution systems of cold and warm water beneath the wall covering in the toilets, as required in the design.

Brass Ball Valves Straight

The work includes purchase, transport and installation of brass ball valves with handle and screw connection.

These valves shall be used for interior split of cold water as given in the design.

The combination valve with metal-plastic HDPE / Al / PEX pipes shall be done through appropriate transitional pieces.

Brass Angle Valves

The work includes purchase, transport and installation of brass angle valves with chrome cap and rosette.

These valves shall be used for installation of sink as is given in the design.

The combination of EC water valve with a divorce of HDPE / Al / PEX pipes shall be made through the final knee with internal thread.

Hydraulic testing of the water pipe network to the test pressure

Testing of plumbing and sanitary water to the PP test pressure shall be performed in accordance with applicable regulations for this type of work.

Testing the installation shall be performed in the presence of the Engineer.

Cleaning, disinfecting and rinsing the water installations

Flushing and disinfection of installations of internal distribution and sanitary PP chlorinated water solution shall be in accordance with applicable technical regulations for this type of work, for a period of min. 3 hours, with the obligatory presence of the Engineer.

Upon completion of disinfection all installation shall be rinsed until the water does not lose the smell of chlorine. Cleaning and rinsing installation shall be done in the presence of the Engineer.

Bacteriological testing of samples for drinking water approval

After the cleaning, disinfection and rinse of internal distribution of sanitary and FP water, a bacteriological examination of water samples shall be done in accordance with the technical requirements for this type of work.

Bacteriological examination of water samples shall be done in the presence of the Engineer.

12.5.2. Sewage pipes

Applicable Standards

TS 301, TS 416, TS 1997, TS 346, TS 10, TS 6047, TS 274 TS 275, TS 12075, TS 385, TS 437, TS 274, TS 544, TS 8080, TSEN 263, TS 6432, TSEN 232, TSEN 247/7, TSEN 263, TS 418/1, TS275, TS 5434, TS 325, TS378, TS327, TS 326, TS2821/1, TSEN 671/1, TSEN 671/2, TS824, TS 1863, TS 1911, TS 736, TS 507, TS 378, TS 737, TS 10, TS 80, TS 811, TS 816, TS 931, TS 2736

Sewage Pipes

The work includes supply, transport and installation of Sewage-triple layer PP pipe and fittings with dimensions in accordance with EN 1451-1 standards and with a socket connection.

The material from which pipes are made shall be non-flammable and is referred to as a category B2 in accordance with standard DIN 4102.

Pipes shall be provided from the movement with the clamps. Clamps shall be installed below the sleeves, and in accordance with instructions of the manufacturer.

Installation of all sewer splits shall be performed by trained and well-featured performer, all in accordance with the design.

HDPE Horizontal Floor Drains

The works include supply, transport, handling and installation of the HDPE horizontal floor drains, height adjustable, with trap and lock insert.

Horizontal floor drains shall be equipped with stainless steel frame dimensions of 123x123mm and chrome grille dimensions 115x115 mm. The insulation for the connection with the floor waterproofing shall be as type HL84 or similar.

PP Roof Ventilation

The works include supply, transport, handling and installation of the PP roof ventilation.

All necessary works shall be done in accordance with the design, manufacturer's instructions and the Engineer approval.

Hydraulic Testing of the Sewage Pipe Network to the Test Pressure

After installation, all sewer watersheds shall be examined for patency - the failure of lead balls through vertical and horizontal channels. In horizontal channels lead ball shall be pushed by water.

All openings shall be closed with wooden plugs and test sections shall be filled with water. After 15 minutes may not be water loss. The required amount of water for testing shall be provided by the Contractor.

Testing of sewage distribution shall be made in the presence of the Engineer.

Sanitary appliances

The works include supply, transport, handling and installation of the sanitary appliances for the gate and customs buildings, according to the Contractor's drawings.

Work on the installation of sanitary equipment shall be made by the skilled workforce in accordance with applicable regulations and technical requirements for performing this kind of work.

The Contractor shall furnish all necessary certificates for the materials used prior to commencement of works. The supplied certificates cannot be older than one year from the date of commencement of works.

Complete Set of a Toilet

The work includes supply, transport and installation of console toilet, installation elements for toilet, carrier for the toilet brush and carrier for the toilet paper.

Console toilet shall be made of white faience, class 1. Rinse shall be with 6 liters of water, lifted from the floor at least 6 cm, with a removable seat and cover.

Installation elements for toilet shall be with installation height of 112cm, with a low noise concealed cistern isolated of dew, with metal CrNi button to activate the flush.

Complete Set of A Toilet for Disabled Persons

The work includes supply, transport and installation of special console toilet with electronic flushing, installation elements for toilet, two-sided wall mounts with carrier for the toilet paper, and carrier for the toilet brush.

Special console toilet with electronic flushing shall be made of white faience, class 1. Rinse shall be with 6 liters of water, lifted from the floor at least 6cm, with a removable seat and without cover.

Installation elements for toilet shall be with, with a low noise concealed cistern (UP320 or similar) isolated of dew.

Two-sided wall mounts with carrier for the toilet paper shall be installed according to the manufacturer's instructions. Model shall be adjusted to the type of electronic activation of toilets.

Complete Set of a Shower Cabin for Installation in a Public Toilet Facilities

The work includes purchase, transport and installation of shower cabin with all installation elements.

Shower trays shall be in white glazed vitreous China, size 900 mm x 900 mm.

The showers shall include a wall-mounted shower head with built-in tube, a mixing tape, recessed soap holder, hand grip and all necessary parts to complete the shower assembly. The mixing tap shall include a bleeder to relieve the pressure when tap is closed. All parts shall be chromium plated.

Each shower cubicle shall be provided with a hardwood seat located in the dry area and at least two (2) coat hooks mounted on the door or wall.

Where no doors are specified, full length heavy-duty plastic shower curtain shall be provided including heavy duty plastic curtain rings and chromium-plated rail fittings. Type and color of curtains shall be approved by the Engineer.

Complete Set of A Urinal for Installation in A Public Toilet Facility

The work includes supply, transport and installation of urinal, installation elements and sensor device for flushing.

Urinals shall be of white faience, class 1, sizes of approximately 40x77cm, connection to the hidden siphon.

Installation element shall have a mounting height of 130cm.

Infrared sensor device for flushing shall be standard.

Complete Set of a Kitchen Sink for Installation in a Kitchen

The work includes purchase, transport and installation of a kitchen sink.

Kitchen sink shall be in stainless steel and integrated in the top of kitchen unit. Minimum size of sink shall be 500x400 and shall include a single strainer when necessary. Sink shall include chromium plated mixing taps. Overflow, rubber plug and chain shall be included.

12.6. Inside fire hydrant network

The work includes full supply of equipment, delivery on site, handling, storage, and installation of all elements for the fire hydrant network in the gate and customs building and the customs warehouse.

The work hydraulic testing of the fire protection water pipes to the test pressure and the cleaning, disinfecting and rinsing the fire protection water pipes shall be done before putting into operation.

12.6.1. Galvanized steel water pipes and fittings pn10

The work includes purchase, transport and installation of galvanized steel water pipes and fittings for internal fire protection network.

Dimension shall be as given in the design. Operating pressures shall be up to 16 bar.

The pipes shall be manufactured as black steel with longitudinally welded pipes for transport of sanitary water. Steel S-195T shall be in accordance with EN10.250.

Hot-dip galvanizing shall be in accordance with the standard EN10.240. The pipes shall be hydraulically tested at a test pressure of 50 bar. Produce shall be in lengths of 6 m, with an external thread and a protective cap at both ends. Marking of mechanical seal shall be for every 1.5m.

Installation of pipe shall be in according to applicable technical requirements and instructions of the Engineer. Pipes shall be fixed to the walls with hooks at every 1.5 to 2.0 m

Pipe shall be insulated inside earth and buildings. Pipes in the earth shall be insulated with coating of bitulit. Pipes that go through the buildings shall be insulated with jute or fleece. The pipes are laid in a trench in the tampon layer of sand 10 cm below and above the vertex.

After all installation, and prior to backfilling trenches, fire protection network shall be tested on operating pressure of 10 bar in the presence of the Engineer.

12.6.2. Wall mounted fire hydrants

The work includes purchase, transport and installation of wall mounted fire hydrants DN 50mm with all necessary parts.

Dimensions shall be 540x540x144mm. Hydrant connection shall be with a diameter of 52mm, type C.

Hose will be 52mm diameter, 15m in length, bent into coils with a nozzle diameter of 12mm.

12.7. Electrical works

12.7.1. Applicable standards

- ISO 14617-6: Letter symbols for measuring and regulating the size
- IEC 60364-4-41 LST Low voltage electrical installations. Requirements for safety. Protection against electric shock

- IEC 60364-4-43 mere electrical installations in buildings. Requirements for safety. Protection against over-current
- IEC 60364-5-52 mere electrical installations in buildings. The selection and placement of electrical equipment. Electrical distribution.
- IEC 60364-5-54 mere electrical installations in buildings. The selection and placement of electrical equipment. Electrical distribution. Earthing arrangements, protective conductors and protective bonding conductors.
- IEC 61131, part 1, part 2, part 3 and part 5 (programmable logic controllers and their peripherals)
- EN 61386-1:2008: Conduit systems for cable management. General requirements
- EN 61386 Series on particular conditions for cabling

12.7.2. General

The electrical works specifications include the supply and mounting of distribution boards secured with doors and keys, colored by basic and polish color. Protection level to be IP 43.

12.7.3. Cables

General Lighting Cables

Supply and install general lighting using cable NHXMH 3x25mm2 in each building.

Lay on cable trays, on walls using junction devices. Average length of cable per item is 8m.

Anti-Panic Lighting Cables

Supply and install anti-panic lighting using cable NHXMH 3x25mm2, laid on cable trays in suspended ceiling and in cable conducts.

Supply and Install Single Phase Supply Feeders

Supply feeders should use cable NHXMH 3x2,5mm2 or NHXMH 3x2,5mm2 where appropriate according to design, laid on cable trays in suspended ceiling on walls in technical rooms and in walls under the plaster.

12.7.4. Supply and install fixings and sockets

Supply and install sockets

Supply and install technical sockets with NHXMH 3x2,5mm2 cable laid on trays and in conducts.

Supply and install sockets for with NHXMH 3x2,5mm2 cable laid on trays and in conducts.

Supply and install three phase supply feeders

For each building, according to Contractor's drawings, supply and install three phase feeders for power supply to electric boiler, using cable N2XH-J 5x2,5mm2.

Supply and install three phase feeders for power supply to AHU, cable N2XH-J 5x….mm2.

All cables laid on cable trays in suspended ceiling on walls in technical rooms and in walls under the plaster.

Wall Mounted Installation Devices

The boxes to be supplied with box, holder and adapted to interior design, for

- single way switch
- two-way switch
- intermediate switch (in gate building only)

Supply and Install Single Phase Sockets

Single phase sockets to be standard 16A, 230V, with protection cap IP43 where appropriate.

Supply and Install Three Phase Sockets in the Warehouse

Three phase sockets to be standard industrial 16A, 400V, with protection cap IP43.

Provide and Install Working Place Power Supply

For each site, implement what is required at the design technical specifications.

12.7.5. Earthing

Earthing to be provided and installed in all three buildings.

Supply FeZn 25x4 mm or 30x3,5 Strips

Strips to be placed for foundation earthing.

Bushing

Supply and install bushing intersections in foundation grounding for generator, cabinets and exposed metal according the schemes in all three buildings.

Supply and install bushing using FeZn 25x4/ 30x3,5mm strip from foundation grounding.

Grounding

Supply and lay cable for earthing GMRO with cable PP00-Y 1x70mm2 or 1x50mm2 according to Contractor's drawings from potential equalization bar SIP. Lay cable under plaster. Conductor crosssection will be verified according to/at design calculations.

Supply and connect PP00-Y 1x16mm to potential equalization bar SIP for connecting odd conducting parts (water and sewage pipes), and provide grounding for PTT and RO.KDS cabinets. Lay cable on clamps.

Provide and install cable PP-Y 1x4mm2 and PS-49 boxes for local potential equalization. Lay cable under blaster from DB to PS-49 box. Average length is 15m per building.

12.7.6. Acceptance tests

The Contractor shall provide testing and commissioning of built installations and grounding and provide certificate from authorized company.

Test including:

- grounding resistance measurements
- continuity of grounding bushings going from roof to ground and cables for protentional equalization measurements
- cable insulation resistance measurements
- earth fault resistance measurement
- continuity of protection conductors' measurements

12.8. Mechanical works

Applicable standards

TS 430, TS4040, TS 4041, TS 497, TS 377, TS 4826, TS 1996, TS 481, TS 617, TS 369,TS 4311, TS 3170, TS 412, TS 996, TS 4925, TS 4310, TS 1107, TS 579, TS 713, TS 11424, TS 2162, TS 2838, TSEN 295, TSEN 625, TSEN 483, TS 579, TS 617, TS 713, TS 1107, TS 1257, TS 2838, TS 2165, TS 5101, DIN 17155, TS 2025, TS 2167, TS 2357, TS 4041, TS 5101, TS 605, TS 378, TS 325, TS 6, TS 326, TS 823, TS 366, TS 800, TS 366, TS 2744, TS 2748, TS 437, TS 274, TS 544, TS 8080, TSEN 263, TS 6432, TSEN 232, TSEN 247/7, TSEN 263, TS 418/1, TS275, TS 5434, TS 325, TS378, TS327, TS 326, TS2821/1, TSEN 671/1, TSEN 671/2, TS824, TS 1863, TS 1911, TS 736, TS 507, TS 378, TS 737, TS 10, TS 80, TS 811, TS 816, TS 931, TS 2736

ASHRAE, DIN, SMACNA, TS 822, TS 2872

12.9. Extra Low voltage works

Applicable standards

- Components of Automatic Fire Detectors (Detectors) Part 4: Power resources, EN 54-4
- Fire Detection and fire alarm systems Part 5: heat detectors – point detectors., EN: 54-5
- Fire detection and alarm systems – part 7: Smoke detectors – Scattered light or ionization-operated point detectors., EN:54-7
- fire detection and fire alarm systems, EN: 54-10
- Flame detectors - Point detectors, EN.4-10/A1
- Fire detection and alarm systems – Chapter 11: Manually operated alarm devices., EN-54-11
- Fire detection and alarm systems –Chapter 12: Smoke detectors –Optical beam beamline detectors., EN: 54-12
- Magnetic tape sound recording and reproduction systems Part 6: From the macro systems to macro, TS HD 311.6 S1
- Magnetic tape sound recording and recording system Chapter 10: Time and address Codes, TS HD 311.10 S1

- Audio - Visual video and television equipment and system Chapter 10: Audio cassette systems, TS HD 369.10 S4
- Color (chrominonia) mark/noise for magnetic tape image recorders (random noise) rate measurement method, TS HD 527 S1
- PCM decoder / encoder sound recording system, TS HD 544 S1
- Telecontrol devices and systems Part 4: Performance characteristics, TS HD 546.4 S1
- Conference systems - Electrical and audio features, TS HD 549 S1
- Type C helical video tape recorders, TS HD 573 S1
- Type B serial video recorders, TS HD 574 S1
- Sound system devices - Part 5: Speakers, TS 976 EN 60268-5

12.9.1. Video supervision system

The works include purchase, supply, installation and connecting to the cable installation of all devices

The works also includes final electrical measurements, issuance of test certificates, user training, preparation of technical and user documentation and start-up.

The following elements are expected to be required for complete installation:

- Rack cabinet - HV (supply and installation), as cabinet 42U/19" Free-standing rack cabinet 800 x 800 x 1970mm and equipment: reversible rounded door of safety glass, removable sides. Back can, if so chosen, be replaced with back door DSRT. Possibilities of cable inlets in the roof, floor and through the back. Ventilation opening for passive ventilation.
- Earthing set,
- Semi-cylindrical lock,
- Patch panel for 24xRJ45/s cat6A,
- Module RJ-45 FTP/SFTP cat. 6A
- Cable arranger with 5 large rings
- Cable organizer for vertical cable duct
- Roof panel with 3 fans and thermostat,
- UPS - Single-phase input and single-phase output with the autonomy of 10 min at 80% load. Dedicated for cabinet.
- Panel power. 7 socket.
- Optical patch panel for fibre-optic cable termination, 19" 1HU with 12xSC multi-mode duplex adaptors, 50/125 um, OM2, with all necessary equipment for splicing and fitting in of the fibre-optic cable, including pigtails,

- TP-Link TL-MC1400 chassis with 14 hot-swap slots for fibre converters 19"/2U, over voltage protection for converters, 2 internal fan coils, accepts any combination of converters, optional redundant supply
- TP-Link MC100CM Fast Ethernet 10/100Mb/s Fibre multi-mode converter, range up to 2km (SC)
- 24x 10/100 Smart Switch with 4 Gigabit Ports and 24 Ports PoE (rackmount), 24 10/100 Mbps and automatic reading Fast Ethernet, 4 10/100/1000 Mbps auto-sensing Gigabit Ethernet switching ports (RJ-45), 2 Dual Personality SFP slots, Power consumption: 225W maximum, 100-240VAC/50-60-Hz universal input, PoE budget: 195W.
- 16-channel network recorder/server (NVR): supports 16 IP cameras (4CIF)/8 IP cameras (720p)/4 IP cameras (UXGA) in real time; compression H.264, record speed of totally 400 fps @4CIF, 200@720P//UXGA; USB2.0 port for storing of video recordings to USB memory stick/HDD; up to 8xSATA HDD; 16 alarm inlets/4 outlets, two independent video streams - DUAL STREAM; regulation of flow through; network for skvai channel, surveillance over the mobile phone, 1Gbit LAN port, CMS software, intelligent analysis, without HDD, 19"/2U, HDMI, VGA and BNC monitor outlets, RS485, RS232 -10oC~+55oC.
- Western Digital, 2 Tb Caviar Green, SATA II, 64Mb, 7200 RPM.
- PC client; Processor: IntelR Core™ i5-2500 (3,30 GHz, 6 MB cache, 4 cores) Chipset: IntelR Q67 Express Memory: 4 GB 1333 MHz DDR3 SDRAM Hard drive: 500 GB 7200 rpm SATA 3.0 Gb/s, Graphic card: Integrated Intel HD, Optical device: SATA SuperMulti LightScribe DVD writer, Network: Intel 82579LM Gigabit Ethernet, Connections: 10x USB 2.0, 1x serial (optional 2nd), 1x parallel(optional), 1x eSATA (optional), 1x DisplayPort, 1x VGA video, 1xPS/2 keyboard, 1x PS/2 mouse, Supply: 320W, Operating system: Genuine WindowsR 10 Professional 64 (or equivalent specification of the PC)
- Monitor, 27" screen, resolution 1920x1080,
- TFT/LED monitor, 18.5" diagonal, contrast 10000:1, illumination 250cd/m2 response 5ms, resolution up to 1360x768.
- Keyboard for operating up to 31 recorders through two independent RS-485 ports, LCD display, 3-directional joystick for operating PTZ cameras, DC 12V
- Software for central video surveillance for ALL devices (DVR, hybrid DVR, IP cameras, NVR PC DVR plates). Supports over 50 devices, watching "live" from up to 64 cameras on one screen, supports four VGA monitors (Triple Monitor function), additional functions; possibility to export video information to various devices, central reception and processing of alarm signals from all connected devices, synchronized recording review from up to 16 cameras simultaneously over the network, support for USB joystick, support for introduction of MAP with correct arrangement of cameras in the facility, E-MAP function, Alarm LOGs with recorded alarm picture, function POP-UP window in alarm situation, NVR software, Stream server,
- SFTP Patch cord Cat6 1m

12.9.2. Fire detection and alarm system

Applicable standards

Due to the fact that the terminal buildings are buildings with public access, the installation and future maintenance of the fire detection and alarm system is mandatory by Turkish Standards.

12.9.3. Computer – telephone installations

The work includes purchase, supply, installation and connecting to the cable installation of all devices. It also includes final user training, preparation of technical and user documentation and start-up. Testing of the installation and issuance of the test certificate for category 6 for each line is also included into the scope of work.

Main Cabinet

Supply, transport, mounting and connection of main telephone cabinet made of pickled sheet with doors standard lock and key, dimensions 590x250x125 mm. The cabinet should be placed in the server room of the gate building at a height of 1.5m.

The telephone installations shall be homogenous and according to the Contractor's drawings, in the gate and customs building.

12.9.4. Alarm system installations

The work includes purchase, supply, installation and connecting to the cable installation of all devices, supply and startup with mounting of elements of the burglary alarm detection system on the executed location, by system programming, functional check-up, user training and takeover with technical documents. Testing of the installation and issuance of the test certificate is also included into the scope of work.

Alarm systems to be installed with similar compatible equipment in the gate and the customs building, and in the customs warehouse.

12.9.5. Access control installations

The work includes purchase, supply, installation and connecting to the cable installation of all devices, the access control system in the gate building and the customs building.

Testing of the installation and issuance of the test certificate is included into the scope of work.

12.9.6. TV installations

TV installations shall be performed in the gate and customs building, according to the positions indicated in the drawings and design.

Card reader charging system

The equipment envisaged for access and parking charging, to be installed in the administration-gate building is the following:

- Cell computer / manual charging
- PC computer configuration: Windows 10 operating system, License Cell computer/manual charging with the following functionalities:
- Calculation of parking tariff
- Validation of subscription RF cards
- Generating daily, weekly, monthly reports
- Device control
- Counting of vehicle presence
- Work in shifts (shift start, shift end)
- Statistical data processing
- Calculation of cards for replacement"
- LCD monitor 19"
- Parking card validator
- Bill printer in outdoor housing (RS 232)
- User display
- Network point - switch 16 port (AT-FS 750/16)
- Router 5 port (AT-AR 415S)

12.9.7. Acceptance testing

The item covers to the examination of the entire executed installation regarding low voltage equipment, to eliminate possible functional and aesthetic defects, put the installation into trial run and hand it over to the Contracting Authority accompanied by the protocol.

Upon completion of works, prior to technical acceptance of the facility, an authorized institution should perform necessary testing and measurement of installations in line with the technical regulations governing this field. The results of the testing should be advised to the Contracting Authority in the adequate public documents.

13. GROUNDING AND CONNECTION SYSTEM

In the grounding systems designed separately in railway applications, potential differences and arcs are observed in case of lightning, load and short circuit. These effects cause damage to construction elements and concrete, electromagnetic irregularities and distortions.

In order to eliminate these negative effects, to prevent contact voltage and step voltage values from threatening human life, it is necessary to connect the grounding system of the electrification with the iron fittings in the construction structures and take some measures on the line.

Necessary plan, sketch, project and detail related to the applications on the line should be prepared.

All metallic fittings should be connected to the railway grounding system. Thus, the potential difference between the accessible points should be decreased. In addition, as some part of return current will be carried by this conductor, the current flowing to the ground is decreased and an improvement in the contact voltage occurs.

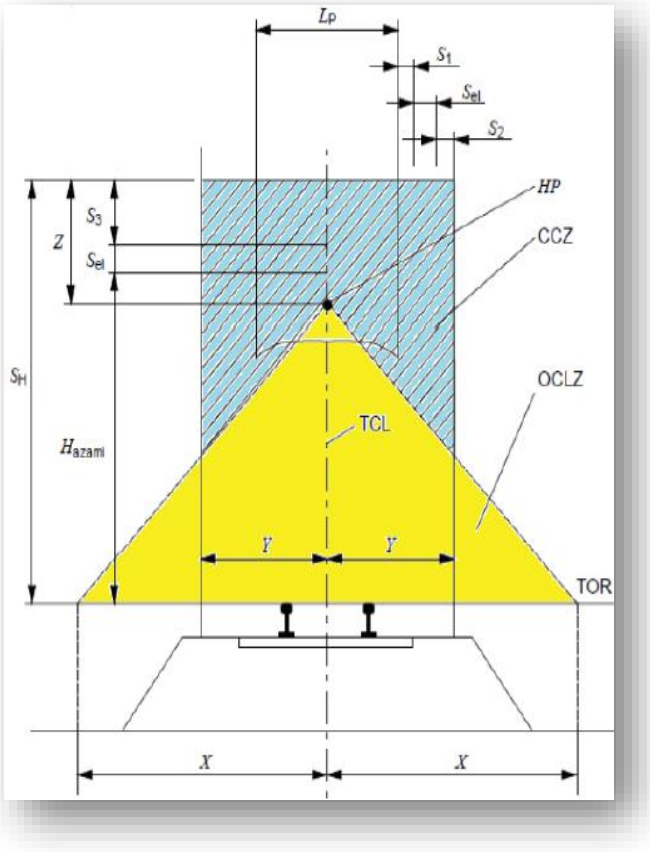

- TOR : Top of rail
- HP : Maximum CW height
- OCLZ : Overhead Contact Line Zones
- CCZ : Current collector zone
- TCL : Track Centre Line
- X : Lateral distance of OCLZ from the track centre line on top of rail level (4 m in TCDD)
- Y : Lateral distance of CCZ from the track centre line (2 m in TCDD)
- Z : Distance between HP and S_H
- S_1 : Lateral movement distance of pantograph
- S_2 : Lateral safety distance of broken or damaged pantograph
- S_3 : Vertical safety distance of broken or damaged pantograph
- S_{el} : Electrical gap according to TS EN 50119
- S_H : Maximum height of pantograph (7.5 m in project design)
- L_P : Pantograph width
- H_{max} : Maximum height of pantograph with upliftc

Figure 1. Overhead Contact Line Protection Zone

The protection measures for exposed conducting parts within the overhead contact line or pantograph zone are listed below:

The exposed conducting parts of the traction system or power supplies which are not for the traction system within the overhead contact line or pantograph zone should be connected directly to the return circuit. Connection to rails or return conductor is a preferred method to ensure this.

Metal structures such as signal portals and signal masts, bridges, roofs of station platform, pipes, fences, container and equipment housings, rails of non-electric lines within the overhead contact line zone or pantograph zone should be connected to the return circuit to ensure that no dangerous contact voltage is enabled.

Iron fittings of the concrete structures should be connected to return circuit as in metal structures.

Conducting parts (metallic fences, signs etc. mounted along the line) that can become alive due to capacitive or inductive coupling with the voltage of the overhead contact line should be connected to grounding system if not directly connected to the return circuit.

For conducting parts of small sizes, there is no need to take any protective measures if the conditions below and in the Table are met.

If the section/part does not contain or support electrical equipment, or contains electrical equipment compliant to only Class II insulation class;

If someone approaching from any direction can see that an alive conductor contacts to a section/part;

Type of Conducting Part	Low Voltage		High Voltage	
	Parallel to Track	Horizontal, Perpendicular to Track	Parallel to Track	Horizontal, Perpendicular to Track
Full Conducting	15	2	3	2
Semi-conducting	15	2	15	2

Table: Exceptions for small conducting parts

13.1.1. Viaducts

The structure reinforcement and the grounding system of electrification should be connected.

Necessary measures should be taken for the track circuits.

The reinforcements should be connected to each other with flexible conductors to ensure the continuity of construction iron reinforcements at the dilatation points.

All guardrails should be connected to the grounding of the viaduct at an average of 150 m. In the case of interruption in the guardrail, it should be connected to the grounding of the viaduct.

All buried grounding conductors should be coated with concrete of 5 cm for corrosion protection; however, the concrete coating should not be greater than 10 cm.

In the case the track on the viaduct is a slab track, a grounding conductor should be available along the viaduct and under each rail. The grounding conductor should be connected to the slab track reinforcement on each 20 m at most in each slab track segment.

The grounding busbars should be installed at each 150 m. Sufficient connection holes should be left on the busbar for grounding of the systems of tunnel structure, electrification, signalling, fire, lighting etc.

The grounding busbar should be copper with a thickness of 50x8 mm, Ø17 mm diameter and at least 6 holes.

The grounding conductor (50x4 mm2 steel strip or at least Ø16 reinforcing iron) should be laid along the viaduct on both sides with a welding of 90 mm length and 4 mm thickness on connection points.

Sample schematic plans related to the connections on viaducts are as follows: The related plans are exemplary and can be revised according to the designed viaduct and construction method.

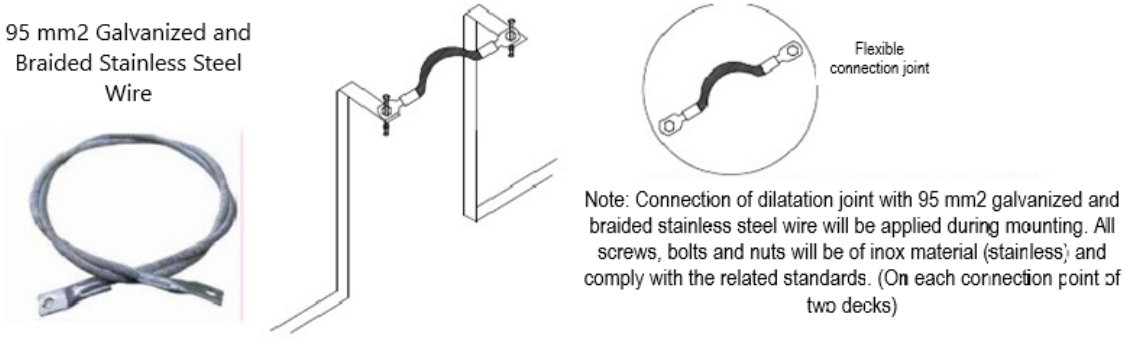

Figure 5. Flexible connection of dilatation joint

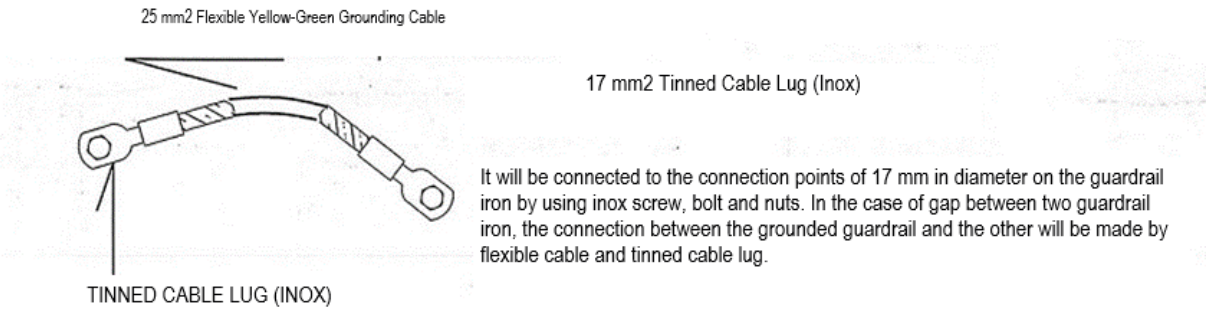

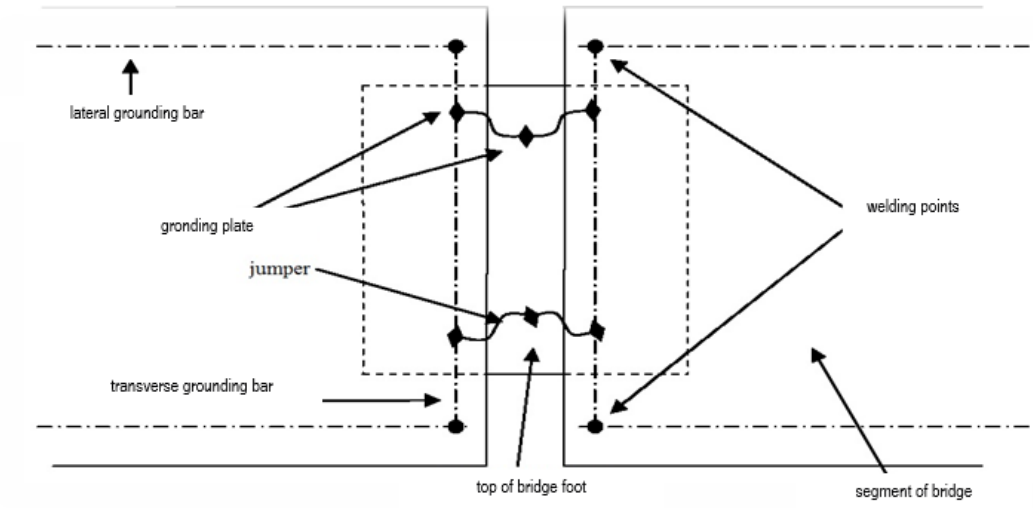

Figure 7. Viaduct reinforcement and grounding connections

13.1.2. Overpasses

For ensuring safety of the line, protection panels should be installed at overpasses and other necessary locations. Application should be compatible with EN 50122-1.

The wire mesh should be of 25x25 mm and the height of the fence from the ground should be at least 2 m.

The diameter of the masts of the protection panels should be Ø2.1/2" and installed at each 1.5 m.

Galvanized sheet plate shall have a thickness of at least 2.5 mm and height of at least 1 m, and should be mounted on guardrail and protection panel masts with self-tapping screws at 25 cm intervals and welding is not allowed.

The danger signs to be mounted on the protection panel should at each 3 m.

Fall of foreign materials from the overpass to the railway line should be prevented and protection against vandalism should be ensured.

The construction reinforcement of the overpass and the grounding system of electrification should be connected.

The safety for the contact voltage and step voltage during the crossing of pedestrian should be ensured.

Sample schematic plan related to the connections on overpasses is as follows: The related plans are exemplary and can be revised according to the designed overpass and construction method.

Grounding and connection designs to be prepared for tunnels, viaducts and bridges shall include the types of materials to be used, their properties, connection details, sections and detail drawings.

13.1.3. Platforms

In the design of the platforms, measures must be taken to connect the iron reinforcements in the concrete along the entire platform and balance the electrical potential. Thus,

All fittings in the concrete of the platform must be connected to each other.

The platforms should be equipped with equipotential connection for safety.

If the platform is of concrete structure, a steel reinforcement should be placed on the upper surface of the platform to create an equipotential surface.

The reinforcement mesh should be welded along the platform with at least Ø 16 mm diameter reinforcing bars.

The concrete layer on the reinforcement mesh surface should not exceed 100 mm, but the concrete coating should be at least 50 mm for protection against corrosion.

The mesh opening should not exceed 150 mm. The overlapping length of two meshes should be 500 mm at least and connected by welding.

Grounding conductor connected to iron reinforcement should be laid along the platform.

Grounding terminals should be prepared for the connection of the metal fittings of canopy and other metal fittings on the platform.

Grounding plate and busbar for the rail connection should be mounted at each 100 (hundred) m.

Sample schematic plan related to the connections on platforms is as follows: The related plans are exemplary and can be revised according to the designed platform and construction method.

Necessary plan, sketch, project and detail related to the applications on the line shall be prepared. Grounding and connection designs mentioned shall include the types of materials to be used, their properties, connection details, sections and detail drawings.

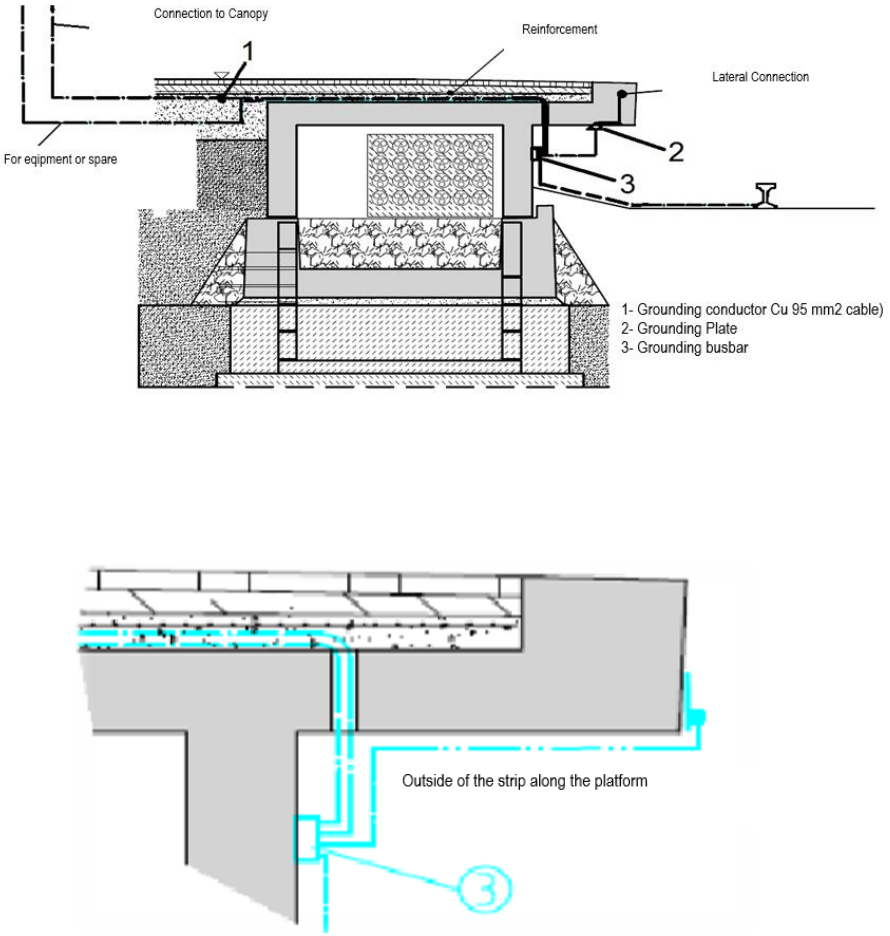

Figure 10. Grounding connection scheme example for platform

* * *